MAULDIN

BY CALDER BROTHERS

Parts Manual

Model: 760

Covers Serial Number Range:

716-W-76TKP8Y2*04716 through _____

Sold & Serviced By:

Contents

1.0 Quick Ordering 1
2.0 Hoppers and Deck 3
2.1 Rear Hopper Wings 3
2.2 Hopper Deck and Gates 5
3.0 Fuel Tank 7
4.0 Hydraulic Tank Assembly 9
4.1 Electronic Controls Assembly 11
5.0 Hydraulics 13
5.1 Hydraulic Cylinders 13
5.2 Two Speed and Track Tension Valves 15
6.0 Engine Compartment 17
6.1 Hood Assembly 17
6.2 Engine Assembly 19
6.3 Screed Heat Control Box and Fuse Panel 21
7.0 Dash Assembly 23
7.1 Right Hand Under Dash Components 23
7.2 Dash Underside Electronics 25
7.3 Dash Steering Underside RH 27
8.0 Main Screed 29
8.1 Main Screed Top Cover 29
8.2 Main Screed Wear Plate 31
9.0 Tow Arms 33
9.1 Left Hand Tow Arm & Screed Link Assembly 33
9.2 Right Hand Tow Arm & Screed Link Assembly 35
10.0 Screed Extensions 37
10.1 Right Hand Extension 37
10.2 Right Hand Endgate Assembly 39
10.3 Right Hand & Left Hand Extension Wear Plates 41
10.4 Left Hand Screed Extension 43
10.5 Left Hand Endgate Assembly 45
11.0 Track Drive Assemblies 47
11.1 Right Hand Track Drive 47
11.2 Left Hand Track Drive 49
12.0 Schematics 51
12.1 Electrical 51
12.2 Hydraulic Schematic 62
13.0 Warranty 63

1.0 Quick Ordering

BOM ID	Part Number	Description	Quantity
1	111-302080	Auger Hanger Support Assembly	2
2	018-0105	Auger Hanger Support Bearing	2
3	015-0045	Auger Coupling Chain	2
4	015-0154	Auger Coupling Half	2
5	092-0014	Auger (LH)	1
6	092-0013	Auger (RH)	1
7	050-0522	Cap (Fuel Tank)	1
8	060-0069	Cap (Hydraulic Tank)	1
9	024-0297	Decal Kit	1
10	010-0784-22	Filter, Engine Oil	1
11	010-0784-2	Filter, Fuel	1
12	010-0784-10	Filter, Water Separator	1
13	021-0169	Filter, Hydraulic Oil (High Pressure)	1
14	015-0222	Plastic, Front Hopper	1
15	091-0006	Push Roller Assembly	2
16	112-219308	Main Screed Plate	1
17	112-219030	Extension Wear Plate LH & RH	2
18	020-0547-A	Heating Element	6
19	020-0548	Temperature Sensor	3
20	050-0361	Spray Nozzle	2
21	015-0356	Sprocket, Drive	2
22	050-0624	Sprocket, Idler Assembly	2
23	050-0257	Track Roller	6
24	020-109473	Asphalt Sonic Sensor	2
25	050-0350	Sonic Sensor Cable	2

2.0 Hoppers and Deck

2.1 Rear Hopper Wings

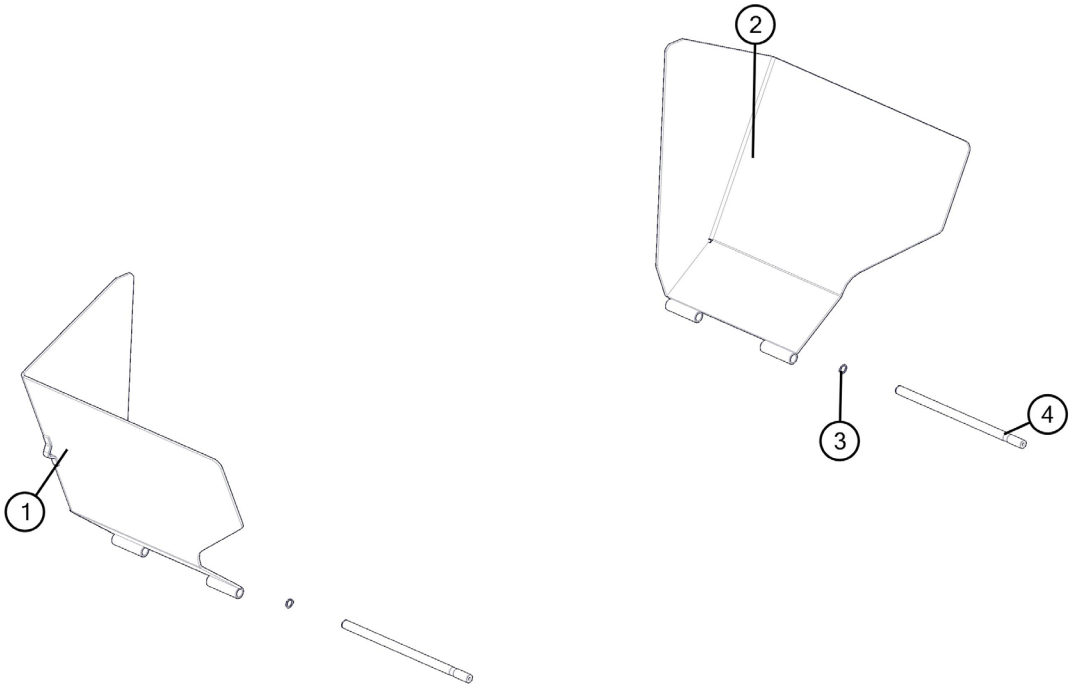

Rear Hopper Wings

BOM ID	PART NUMBER	DESCRIPTION	Qty
1	092-410242	REAR HOPPER SIDE WELDMENT, RIGHT	1
2	092-410243	REAR HOPPER WELDMENT, LEFT	1
3	050-0303	SNAP RING EXTERNAL 15/16”	2
4	093-206018	SHAFT REAR HOPPER	2

2.2 Hopper Deck and Gates

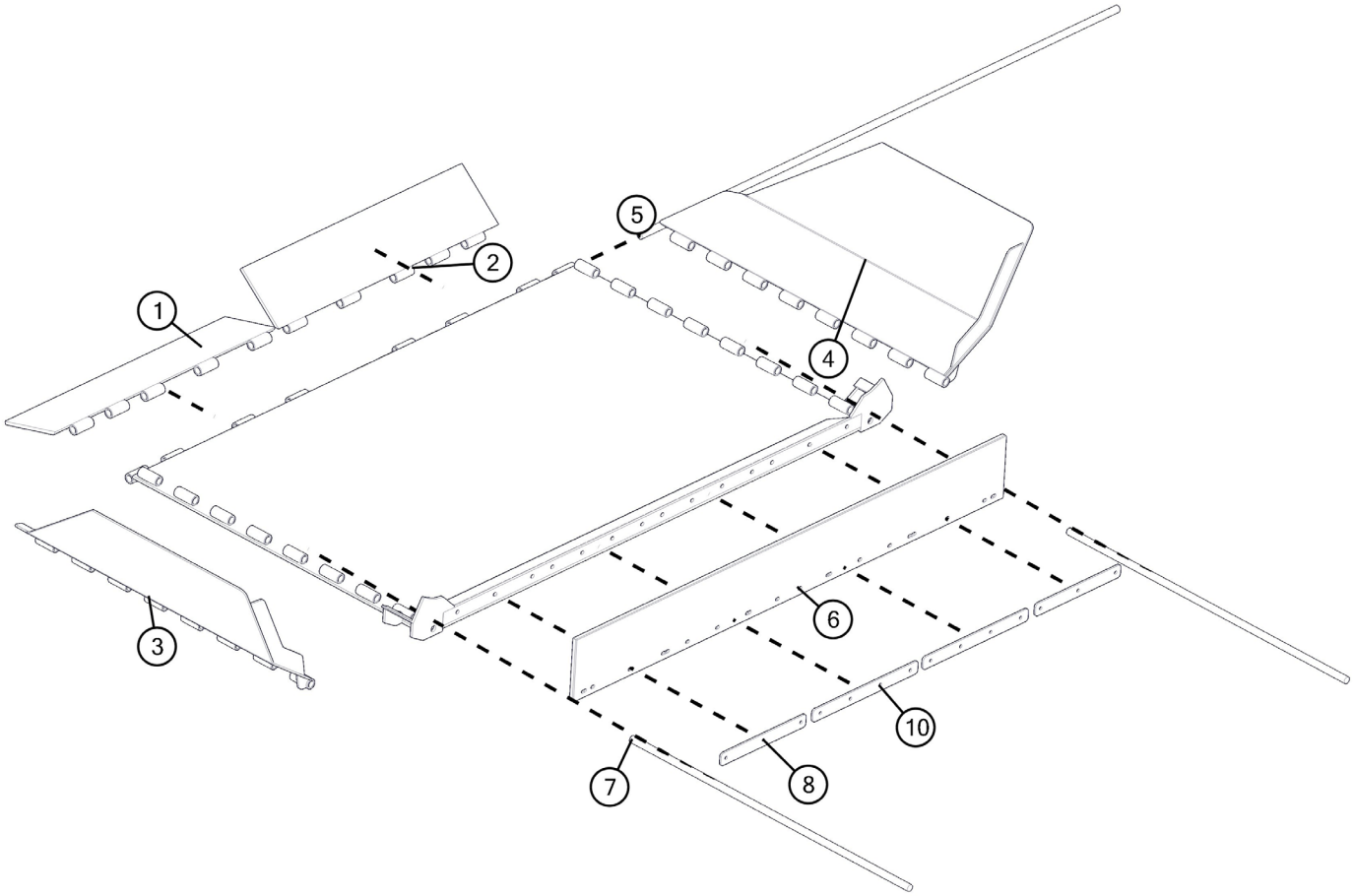

Hopper Deck

BOM ID	PART NUMBER	DESCRIPTION	Qty
1	092-410050	FLOW GATE WELDEMENT, RIGHT	1
2	092-410050	FLOW GATE WELDEMENT, LEFT	1
3	092-410250	HOPPER FRONT RH	1
4	092-410250	HOPPER FRONT LH	1
5	093-410050	HOPPER BED HINGE ROD	1
6	015-0222	HOPPER FRONT FLASHING	1
7	093-410050	HOPPER SIDE HINGE ROD, FRONT	2
8	093-100752	FRONT PLASTIC RETAINER PLATE	2
10	093-100750	RETAINER, HOPPER SIDE RUBBER FLAP	2

3.0 Fuel Tank

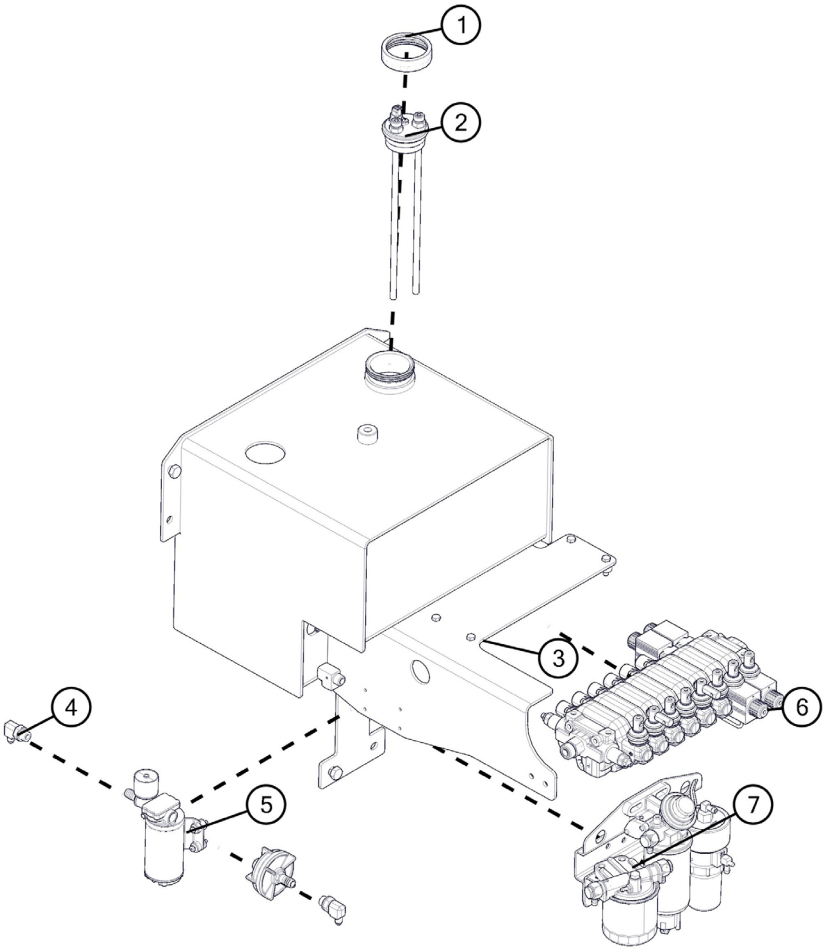

Fuel Tank

BOM ID	PART NUMBER	DESCRIPTION	Qty
1	019-421106	FUEL SENDER NUT	1
2	019-421104	VDO FUEL SENDER CAP	1
3	092-760300	FUEL TANK	1
4	014-1127	BSPP 90 DEGREE ELBOW FITTING	2
5	011-0278	Washdown Pump	1
6	014-0475	Valve Bank Hydraulic	1
7	Filter Assembly	Filter Assembly	1
7.1	010-0784-2	Fuel Filter	1
7.2	010-0784-10	Filter Fuel Water Separator	1
7.3	010-0784-1	Fuel Pump	1
8	011-0278-1	Filter Washdown Pump	1

4.0 Hydraulic Tank Assembly

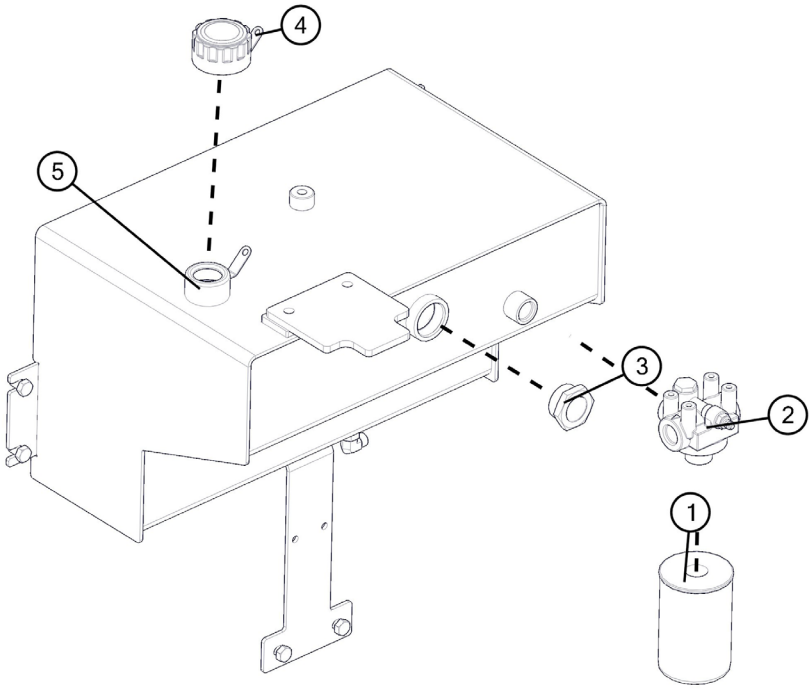

Hydraulic Tank Assembly

BOM ID	PART NUMBER	DESCRIPTION	Qty
1	021-0169	HIGH PRESSURE HYD OIL FILTER	1
2	021-0233	HYDRAULIC OIL FILTER HEAD	1
3	060-0066	SIGHT GLASS	1
4	060-0069	TANK CAP	1
5	092-760150	HYDRAULIC TANK WELDMENT	1

4.1 Electronic Controls Assembly

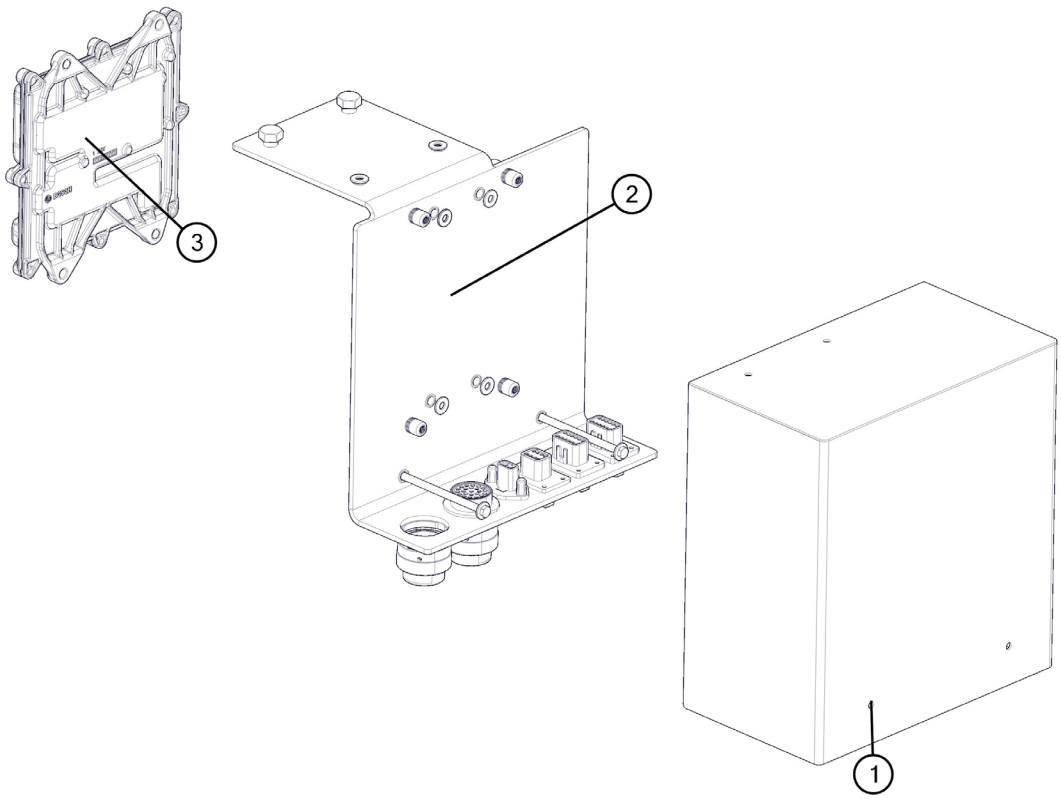

Electronic Controls Assembly

BOM ID	PART NUMBER	DESCRIPTION	Qty
1	092-760160	ELECTRICAL COMPONENTS COVER WELDE-MENT	1
2	093-760156	ENGINE CONTROLS MOUNTING PLATE	1
3	ENGINE CONTROL MODULE		1
4	020-0968 (Now Shown)	PAVER CONTROL MODULE	1

5.0 Hydraulics

5.1 Hydraulic Cylinders

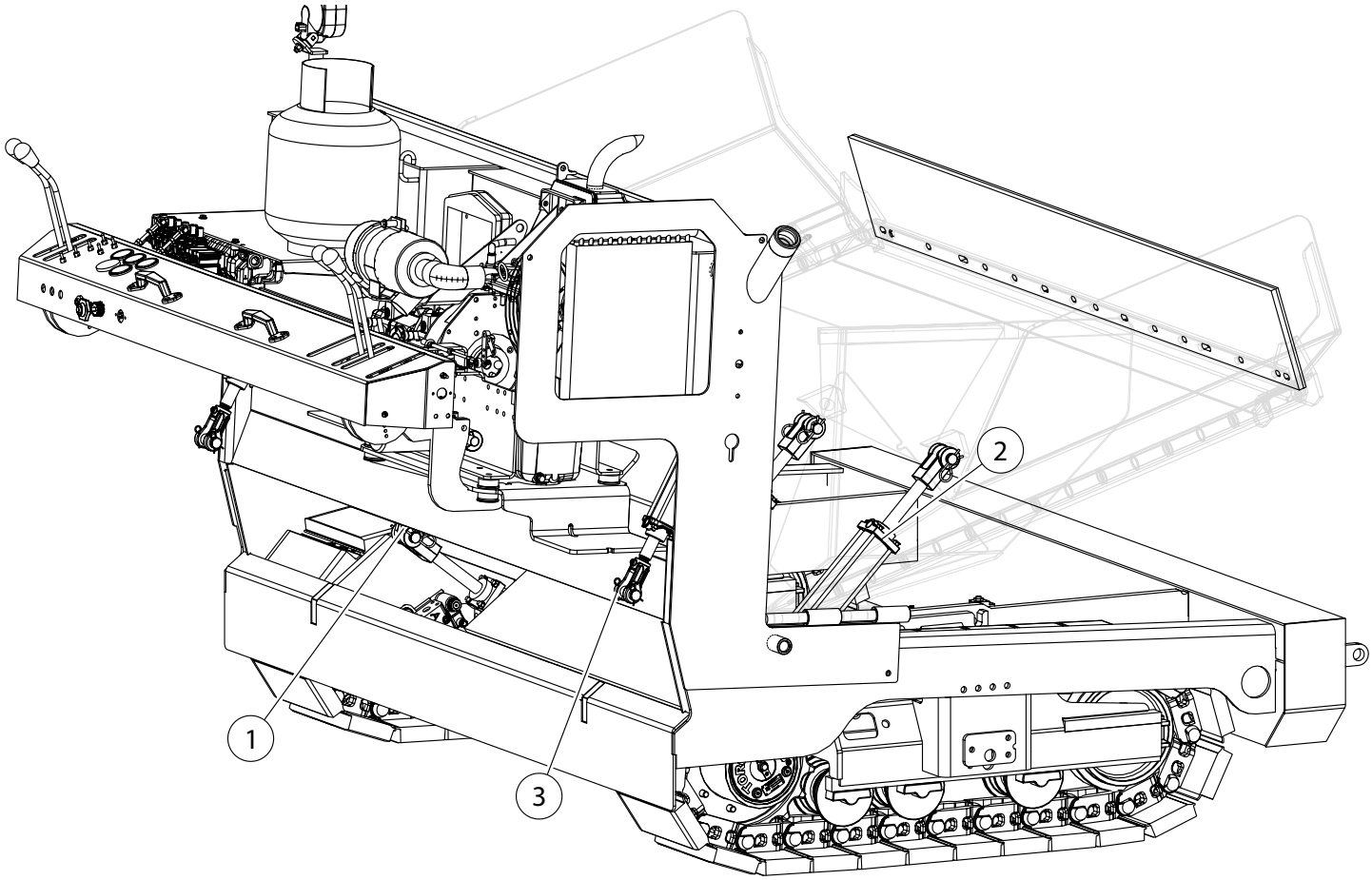

Hydraulic Cylinders

BOM ID	Part Number	Description	Qty
1	012-0005	Cylinder Gate	2
2	012-0070	Cylinder Hopper Track Paver	2
2.B	012-0005	Cylinder Hopper Rubber Tire Paver	1
3	012-0065	Cylinder Hopper	2

5.2 Two Speed and Track Tension Valves

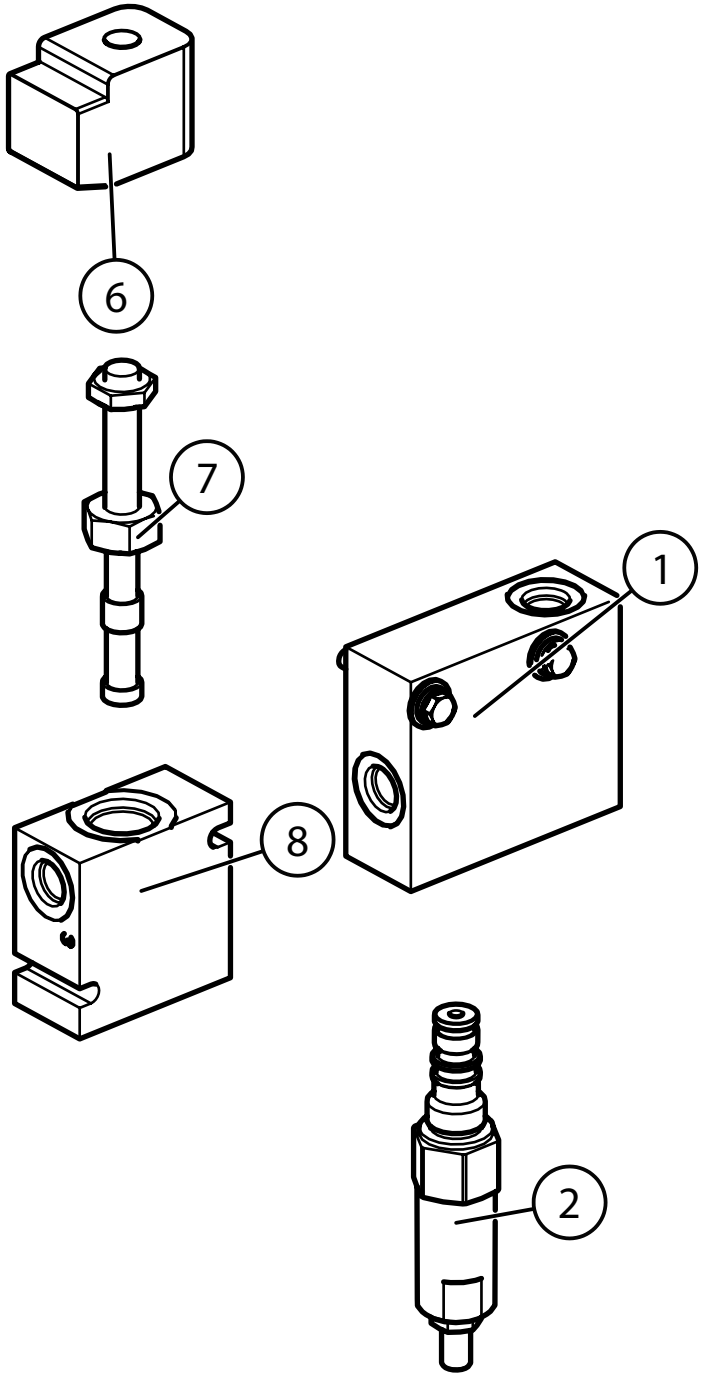

Two Speed and Track Tension Valves

BOM ID	Part Number	Description	Qty
1	017-0197	Block Body	1
2	017-0198	Cartridge Valve Counter Balance	1
6	017-0240C	Coil	1
7	017-0240V	Cartridge Valve	1
8	017-0241	Body	1

6.0 Engine Compartment

6.1 Hood Assembly

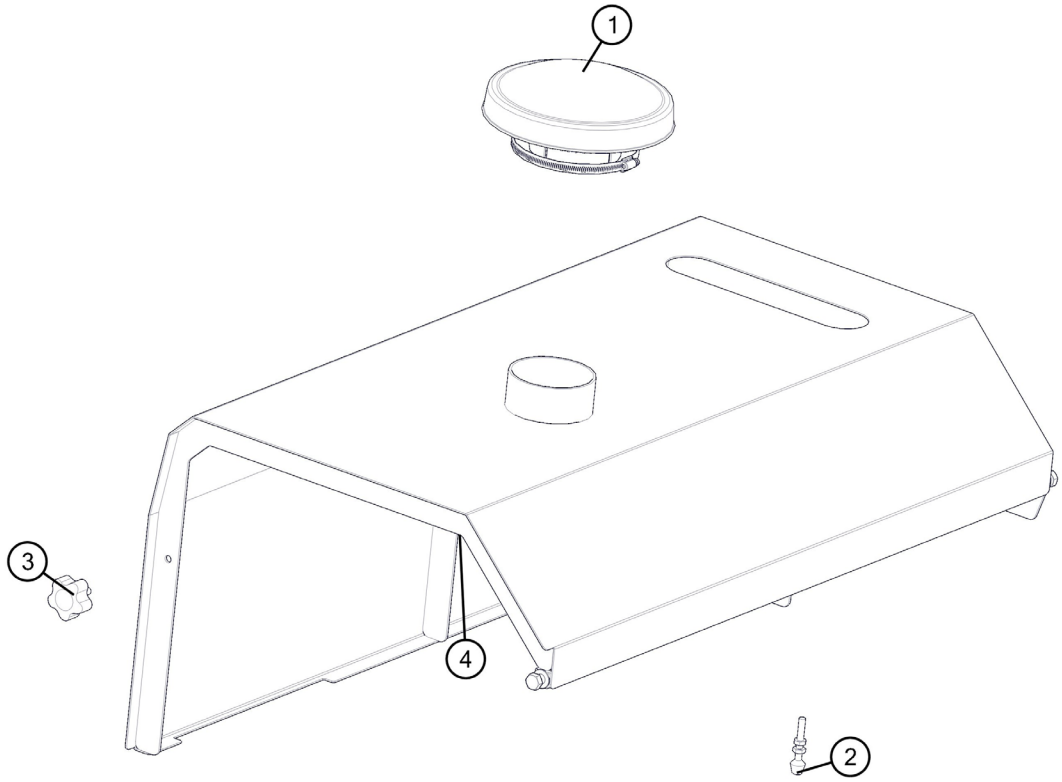

Hood Assembly

BOM ID	PART NUMBER	DESCRIPTION	Qty
1	050-0814	4.5” RAIN CAP	1
2	030-0520	HOOD HEIGHT ADJUSTMENT ROD	1
3	86904	FIVE ARM KNOB, 3/8”-16, 1” LONG	1
4	092-760400	HOOD, WELDMENT	1

6.2 Engine Assembly

Exploded View Not Available

Engine Assembly

BOM ID	PART NUMBER	DESCRIPTION	QTY
1	010-0784-1	FUEL PUMP	1
2	010-0784-2	FUEL FILTER	1
3	010-0784-3	WATER PUMP	1
4	010-0784-4	WATER TEMP SENSOR	1
5	010-0784-5	THERMOSTAT	1
6	010-0784-6	COOLANT RESERVE TANK	1
7	010-0784-7	RADIATOR/CAC	1
8	010-0784-8	UPPER RADIATOR HOSE	1
9	010-0784-9	LOWER RADIATOR HOSE	1
10	010-0784-10	WATER SEPARATOR CARTRIDGE	1
11	010-0784-11	PRIMARY AIR FILTER	1
12	010-0784-12	SAFETY AIR FILTER	1
13	010-0784-13	PLASTIC INTAKE HOOD	1
14	010-0784-14	MUFFLER GASKET	1
15	010-0784-15	STARTER	1
16	010-0784-16	ALTERNATOR	1
17	010-0784-17	PUSHER FAN	1
18	010-0784-18	FAN SPACER 12 MM	1
19	010-0784-19	FAN DRIVE PULLEY 104 MM	1
20	010-0784-20	FAN PULLEY 97 MM	1
21	010-0784-21	V BELT	1
22	010-0784-22	OILFILTER CARTRIDGE	1
23	010-0784-23	OIL SWITCH	1
24	011-0273	HYDRAULIC DRIVE PUMP TANDEM	1
25	011-0152A	AUXILARY HYD PUMP	1
26	020-0877	GENERATOR 14KW	1

6.3 Screed Heat Control Box and Fuse Panel

Exploded View Not Available

Screed Heat Control Box and Fuse Panel

BOM ID	PART NUMBER	DESCRIPTION	Qty
1	020-0793	ELECTRICAL MOUNTING CLIP	1
4	020-1039	RECEPTACLE 12-PIN FLANGED KEYED B	1
5	020-1176	REC, 12P, GRY, BUSBAR 1X12, NICKEL, A	1
6	020-1213	REC, 29P, AL, E, 12/16/20, S	1
7	020-1338	2 Pin Receptacle, Screw Panel Mount, with Gasket, Grey	1
8	020-760001	GENERATOR CONTROL ENCLOSURE	1
9	050-0860	SNUBBING WASHER, 1.56” OD x .39” ID x .09” THK	4
10	093-760114	POWER CENTER BRACKET	1
11	Hex Bolt 0.375-16 X 2.250	BOLT, HEX HEAD, 3/8-16, GR 8, 2” LONG, PLAIN FINISH	4
12	Hex Nut 0375-16	HEX NUT, PLAIN FINISH, 3/8”-16	4

7.0 Dash Assembly

7.1 Right Hand Under Dash Components

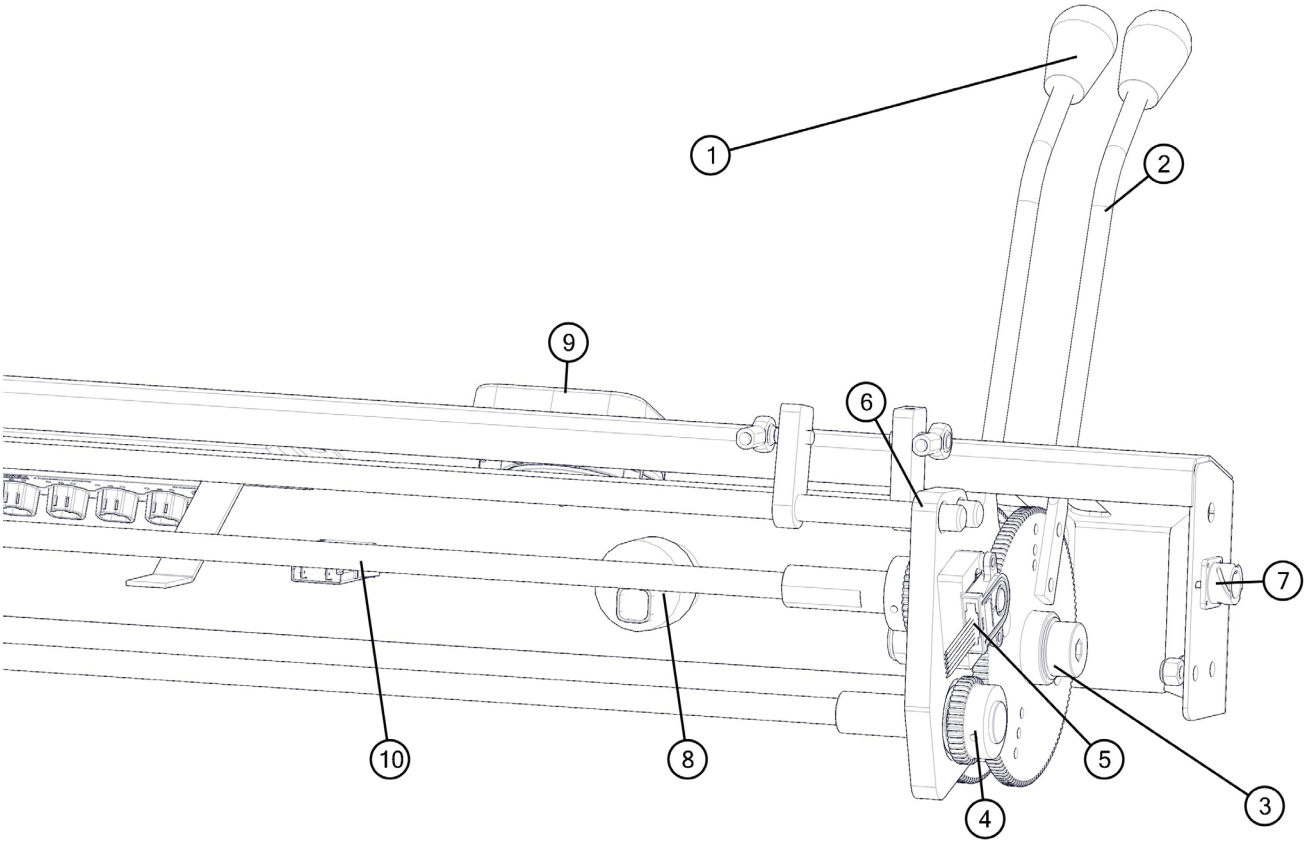

Right Hand Under Dash Components

BOM ID	PART NUMBER	DESCRIPTION	Qty
1	050-0388	ROD END PLASTIC HANDLE	2
2	093-0318	LEVER HANDLE	2
3	093-100074	PAVER STEERING GEAR	2
4	093-100075	STEERING GEAR, SMALL	2
5	020-1384	SENSOR STEERING POSITION	1
6	018-0625	16mm ID BRONZE BUSHING	2
7	050-0372	6 PIN RECEPTACLE BAYONET STYLE FLANGE MOUNT	1
8	020-0955	KEYSWITCH	1
9	020-1326	DISPLAY HMI	1
10	020-109474	2.0 USB CHARGER	1
11 Not Shown	020-0002	Neutral Safety Switch	2

7.2 Dash Underside Electronics

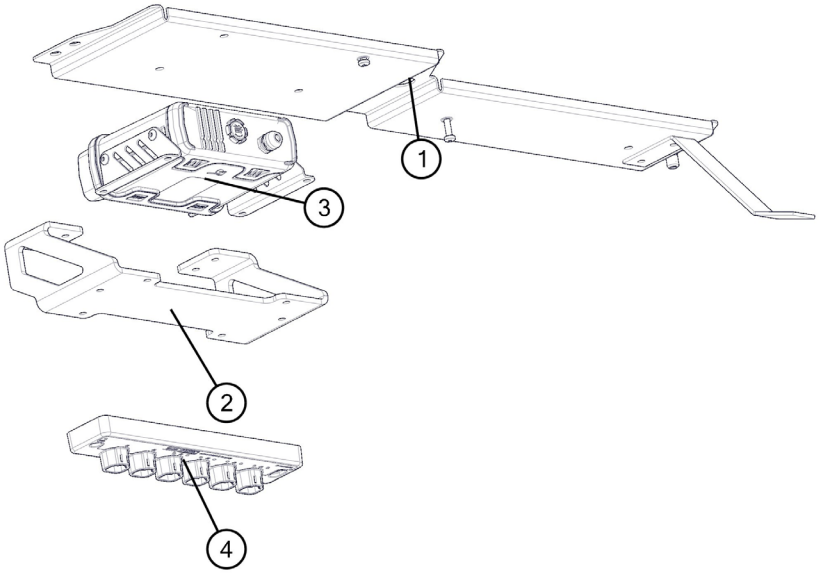

Dash Electronics

BOM ID	PART NUMBER	DESCRIPTION	Qty
1	020-760x15		1
2	093-760830	TELEMATICS ELECTRONIC BRACKET	1
3	020-1339	CONTROLLER TELEMATICS	1
4	020-1174	SPLITTER CAN DATA 6 PORT	1

7.3 Dash Steering Underside RH

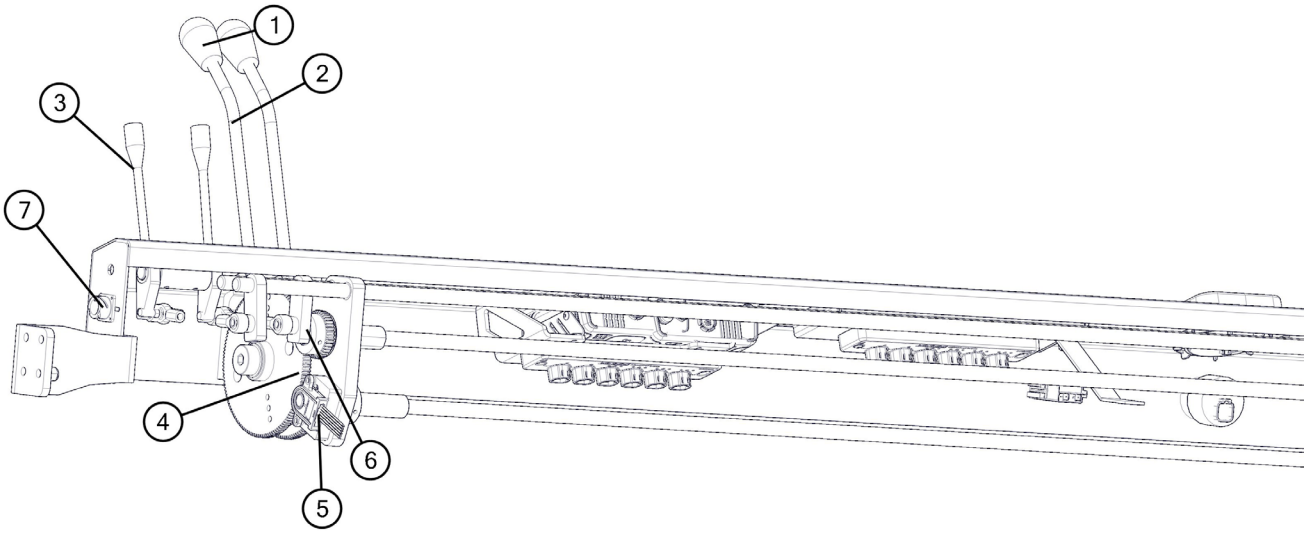

Dash Steering RH

BOM ID	PART NUMBER	DESCRIPTION	Qty
1	050-0388	ROD END PLASTIC HANDLE	2
2	093-0318	LEVER	2
3	014-0475-2	OPERATOR HANDLE	2
4	093-100074	PAVER STEERING GEAR	2
5	020-1384	STEERING ANGLE SENSOR	1
6	093-100075	STEERING GEAR, SMALL	2
7	050-0372	6 PIN RECEPTACLE BAYONET STYLE FLANGE MOUNT	1

8.0 Main Screed

8.1 Main Screed Top Cover

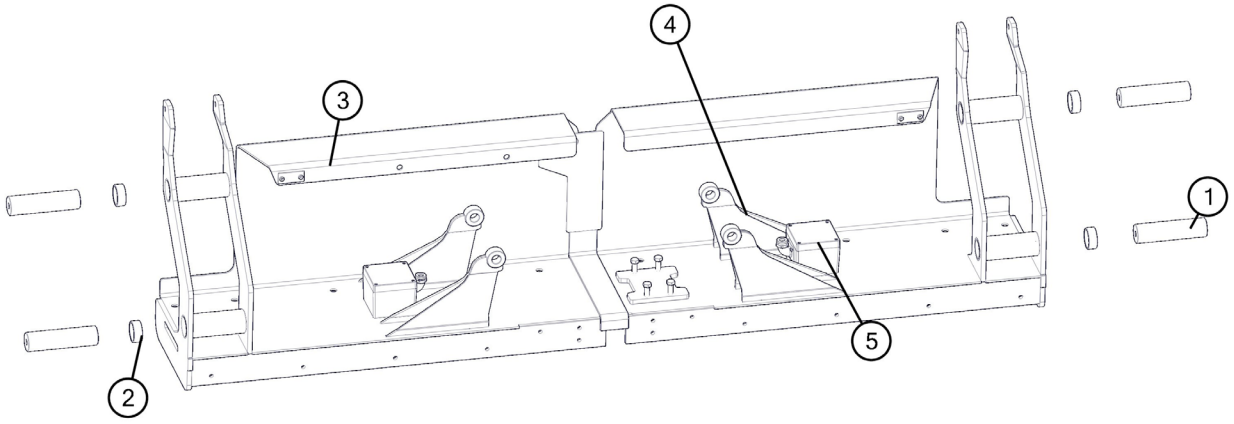

Main Screed Top Cover

BOM ID	PART NUMBER	DESCRIPTION	Qty
1	113-200018	PIVOT PIN	4
2	018-0104	BRONZE BUSHING	8
3	112-219003	SCREED MAIN COVER WELDMENT, LEFT	1
4	112-219002	SCREED MAIN COVER WELDEMENT, RIGHT	1
5	020-760010	HEAT STRIP BOX ASSEMBLY	2
6 (Not Shown)	050-0147	RATCHET JACK ASSEMBLY	2
7 (Not Shown)	020-0667	ELECTRIC VIBRATOR	1
8 (Not Shown)	111-200230	TURN BUCKLE ASSEMBLY	2

8.2 Main Screed Wear Plate

Exploded View Not Available

Main Screed Wear Plate

BOM ID	PART NUMBER	DESCRIPTION	Qty
1	112-219308	SCREED BOTTOM WEAR PLATE	1
2	020-0547-A	HEATING ELEMENT	4
3	020-219002	HEATING ELEMENT TERMINAL BLOCK ASSEMBLY	2
4	113-309290	HEATING ELEMENT COVER	4

9.0 Tow Arms

9.1 Left Hand Tow Arm & Screed Link Assembly

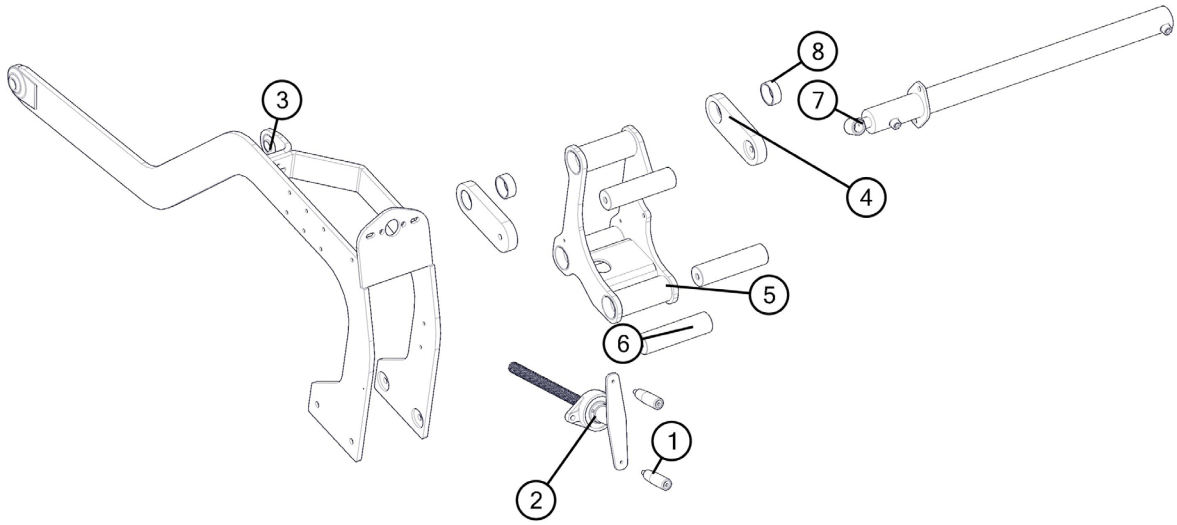

Left Hand Tow Arm & Screed Link Assembly

BOM ID	PART NUMBER	DESCRIPTION	Qty
1	113-100427	FREE SPIN HANDLE ASSEMBLY	2
2	112-200070	DEPTH HANDLE ASSEMBLY	1
3	112-200055	TOW ARM LH WELDMENT	1
4	111-200016	UPPER LINK PIVOT BAR	2
5	112-200013	FREEDOM PIVOT LINKAGE WELDEMENT, LEFT	1
6	113-200018	PIVOT PIN	3
7	012-0067	CYLINDER SCREED EXTENSION	1
8	018-0098	COMPOSITE BUSHING (Pieces in 112-200018 not shown)	6

9.2 Right Hand Tow Arm & Screed Link Assembly

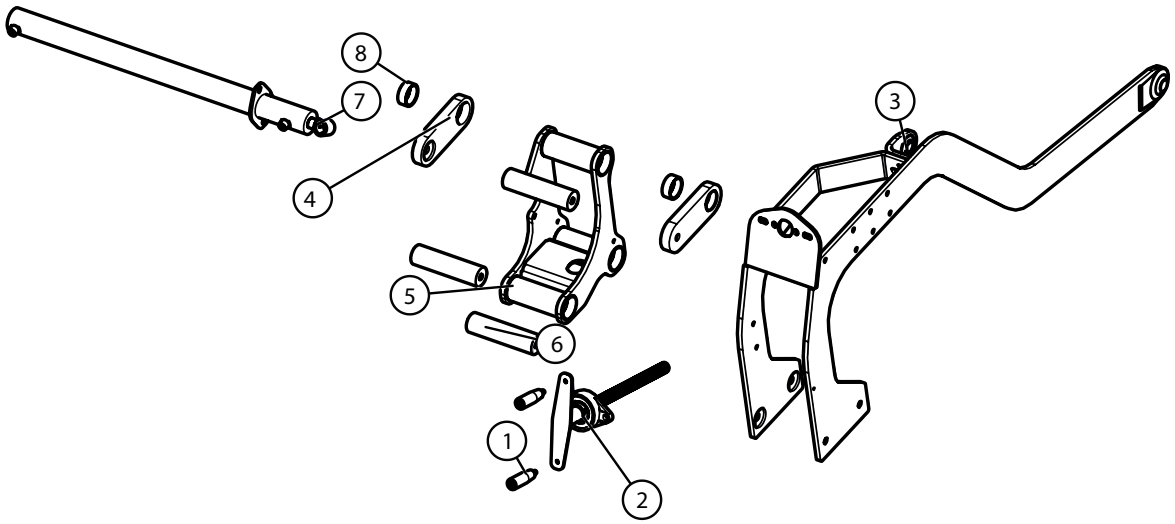

Right Hand Tow Arm & Screed Link Assembly

BOM ID	PART NUMBER	DESCRIPTION	Qty
1	113-100427	FREE SPIN HANDLE ASSEMBLY	2
2	112-200070	DEPTH HANDLE ASSEMBLY	1
3	112-200054	TOW ARM RH WELDMENT	1
4	111-200016	UPPER LINK PIVOT BAR	2
5	112-200012	FREEDOM PIVOT LINKAGE WELDEMENT, RIGHT	1
6	113-200018	PIVOT PIN	3
7	012-0067	CYLINDER SCREED EXTENSION	1
8	018-0098	COMPOSITE BUSHING (Pieces in 112-200018 not shown)	6

10.0 Screed Extensions

10.1 Right Hand Extension

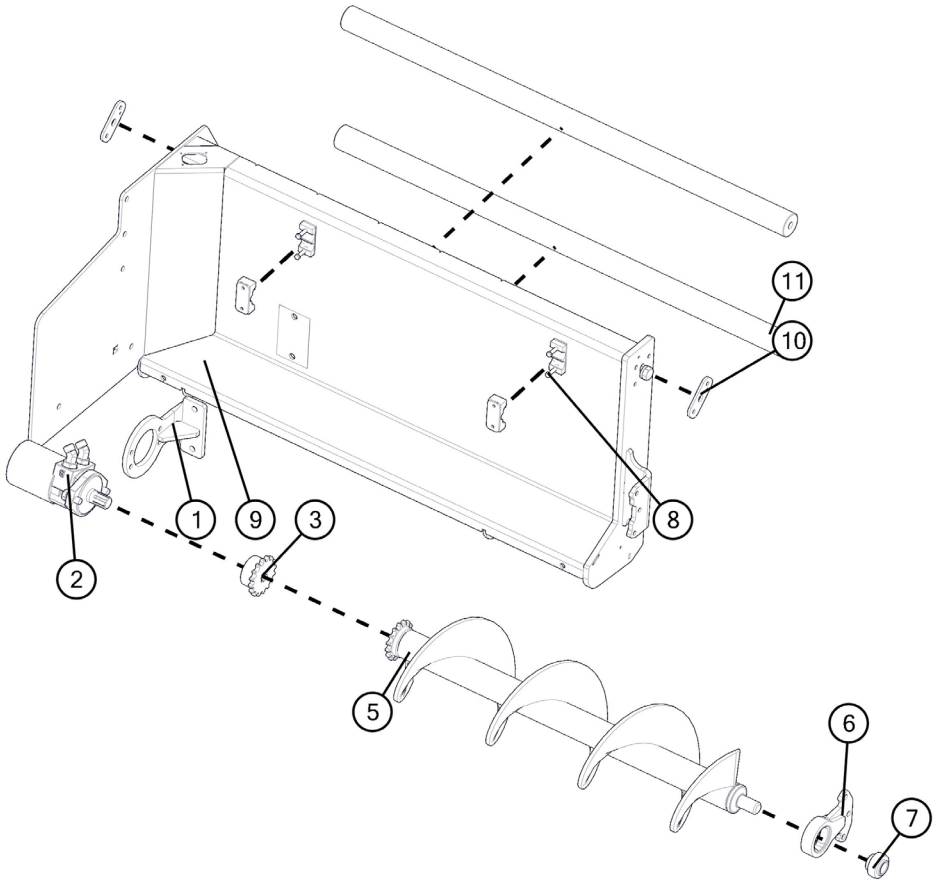

Right Extension

BOM ID	PART NUMBER	DESCRIPTION	Qty
1	112-200072	AUGER MOTOR MOUNTING BRACKET WELDMENT	1
2	013-0096	HYDRAULIC MOTOR	1
3	015-0154	SPROCKET	1
5	092-0013	AUGER RH	1
6	111-302080	AUGER HANGER ASSEMBLY (INCLUDES BEARING)	1
7	018-0105	BEARING INSERT, SPHERICAL OD, 1” SHAFT	1
8	050-0415	3 HOSE CLAMP ASSEMBLY	2
9	112-219014	EXTENSION WELDMENT, RIGHT	1
10	113-200082	EXTENSION HEIGHT ADJUSTMENT SHIM, A	2
11	113-219169	CHROME EXTENSION GUIDE RODS	2
12 (Not Shown)	050-0350	HARNESS SONIC CABLE	1
13 (Not Shown)	020-109473	SENSOR SONIC	1
14 (Not shown)	015-0045	Chain Coupler for Auger	1

10.2 Right Hand Endgate Assembly

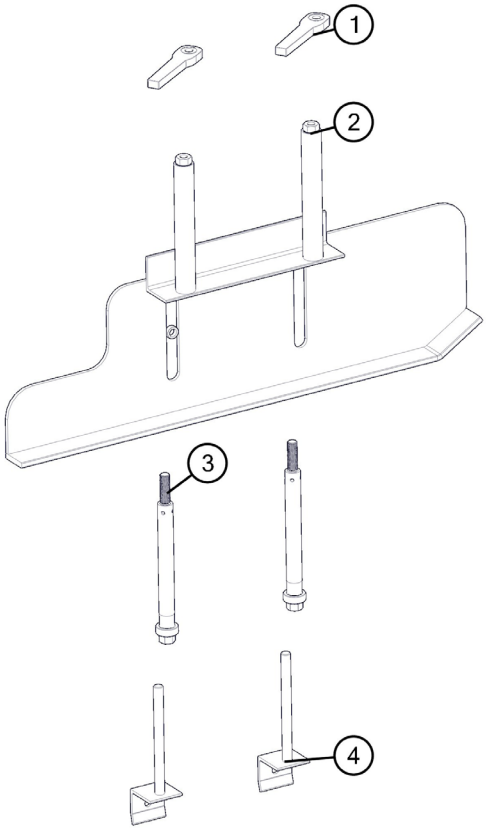

Right Hand Endgate Assembly

BOM ID	PART NUMBER	DESCRIPTION	Qty
1	111-104170	RACHET HANDLE, SMALL	2
2	112-100850	WELDMENT RH ENDGATE	1
3	112-201004	ENDGATE ACME TUBE WELDEMENT	2
4	112-201012	ASME ROD WELDEMENT	2

10.3 Right Hand & Left Hand Extension Wear Plates

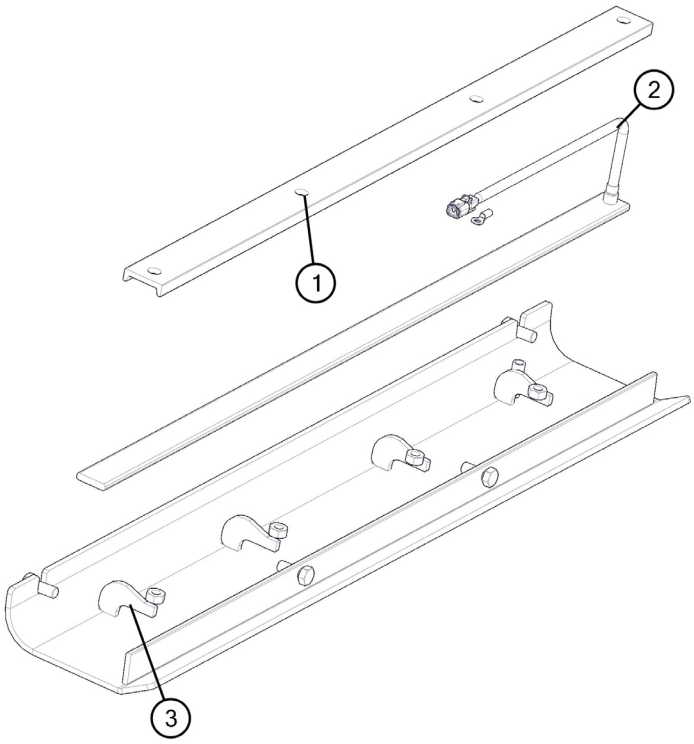

Right Hand & Left Hand Extension Wear Plates

BOM ID	PART NUMBER	DESCRIPTION	Qty
1	113-309290	HEAT STRIP RETAINER, 40”	1
2	020-0547-A	HEATING ELEMENT	1
3	112-219030	EXTENSION WEAR PLATE WELDMENT	1

10.4 Left Hand Screed Extension

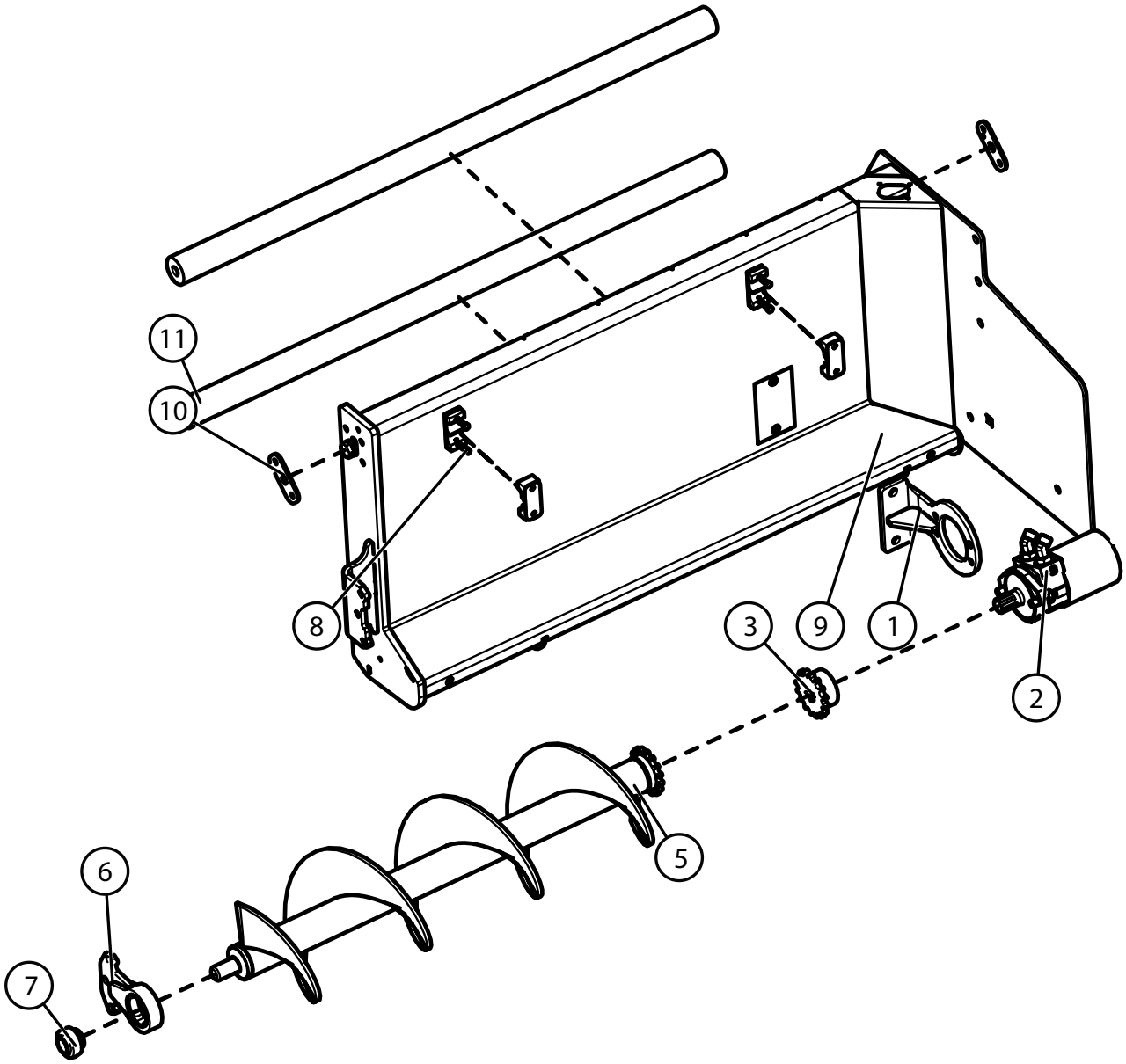

Left Hand Screed Extension

BOM ID	PART NUMBER	DESCRIPTION	Qty
1	112-200072	AUGER MOTOR MOUNTING BRACKET WELDMENT	1
2	013-0096	HYDRAULIC MOTOR	1
3	015-0154	SPROCKET	1
5	092-0014	AUGER RH	1
6	111-302080	AUGER HANGER ASSEMBLY (INCLUDES BEARING)	1
7	018-0105	BEARING INSERT, SPHERICAL OD, 1” SHAFT	1
8	050-0415	3 HOSE CLAMP ASSEMBLY	2
9	112-219015	EXTENSION WELDMENT, LEFT	1
10	113-200082	EXTENSION HEIGHT ADJUSTMENT SHIM, A	2
11	113-219169	CHROME EXTENSION GUIDE RODS	2
12 (Not Shown)	050-0350	HARNESS SONIC CABLE	1
13 (Not Shown)	020-109473	SENSOR SONIC	1
14 (not Shown	015-0045	Chain Coupler for Auger	1

10.5 Left Hand Endgate Assembly

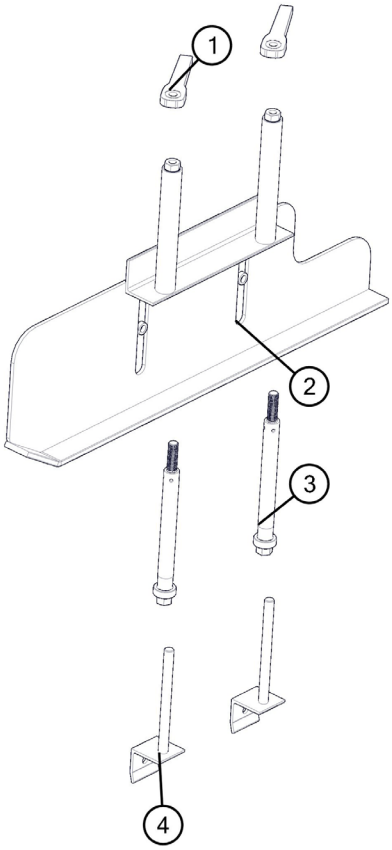

Left Hand Endgate Assembly

BOM ID	PART NUMBER	DESCRIPTION	Qty
1	111-104170	RACHET HANDLE, SMALL	2
2	112-100851	ENDGATE WELDMENT LH	1
3	112-201004	ENDGATE ACME TUBE WELDEMENT	2
4	112-201012	ASME ROD WELDEMENT	2

11.0 Track Drive Assemblies

11.1 Right Hand Track Drive

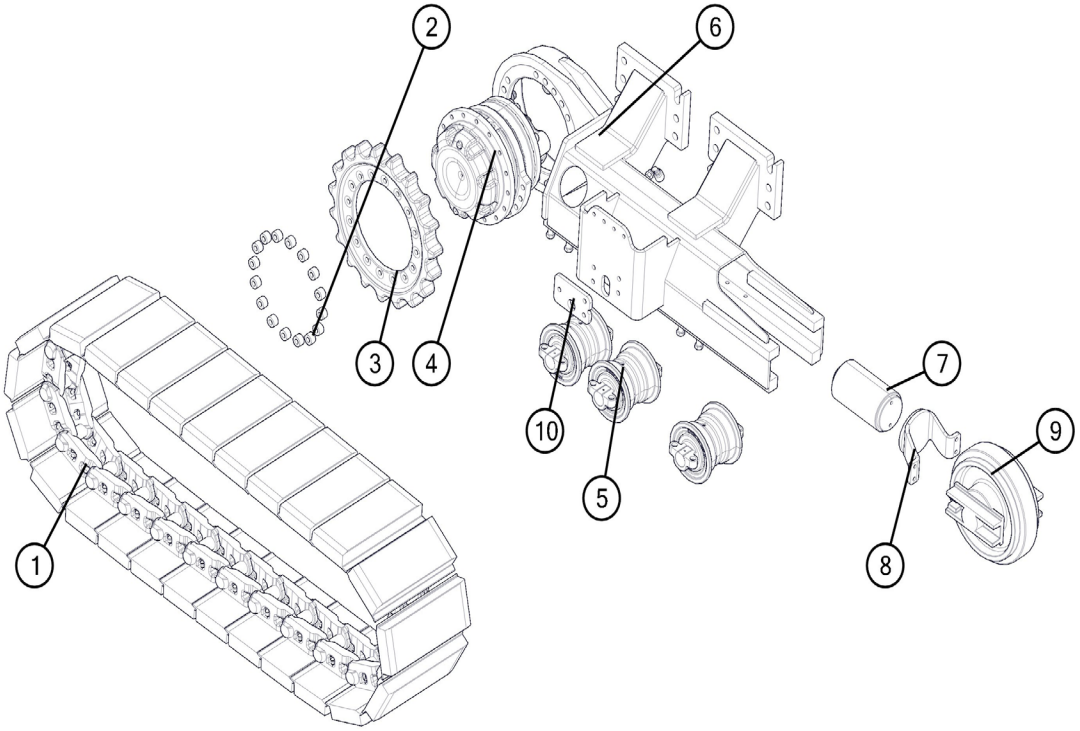

Right Hand Track Drive

BOM ID	PART NUMBER	DESCRIPTION	Qty
1	050-0439	COMPLETE TRACK ASSEMBLY	1
2	093-760514	1/2” BOLT SPACER	16
3	015-0356	760 TRACK DRIVE SPROCKET	1
4	013-0112	DRIVE MOTOR PLANTARY COMBINATION UNIT	1
5	050-0257	UNDERCARRIAGE TRACK ROLLER, SMALL	3
6	092-760500	UNDERCARRIAGE WELDEMENT, RIGHT	1
7	012-0060	CYLINDER TRACK TENSION	1
8	092-204524	TRACK TENSION CYLINDER PRESSURE PLATE	1
9	050-0624	TRACK IDLER WHEEL ASSEMBLY	1
10	093-204550	TOW POINT MOUNTING PLATE	1

11.2 Left Hand Track Drive

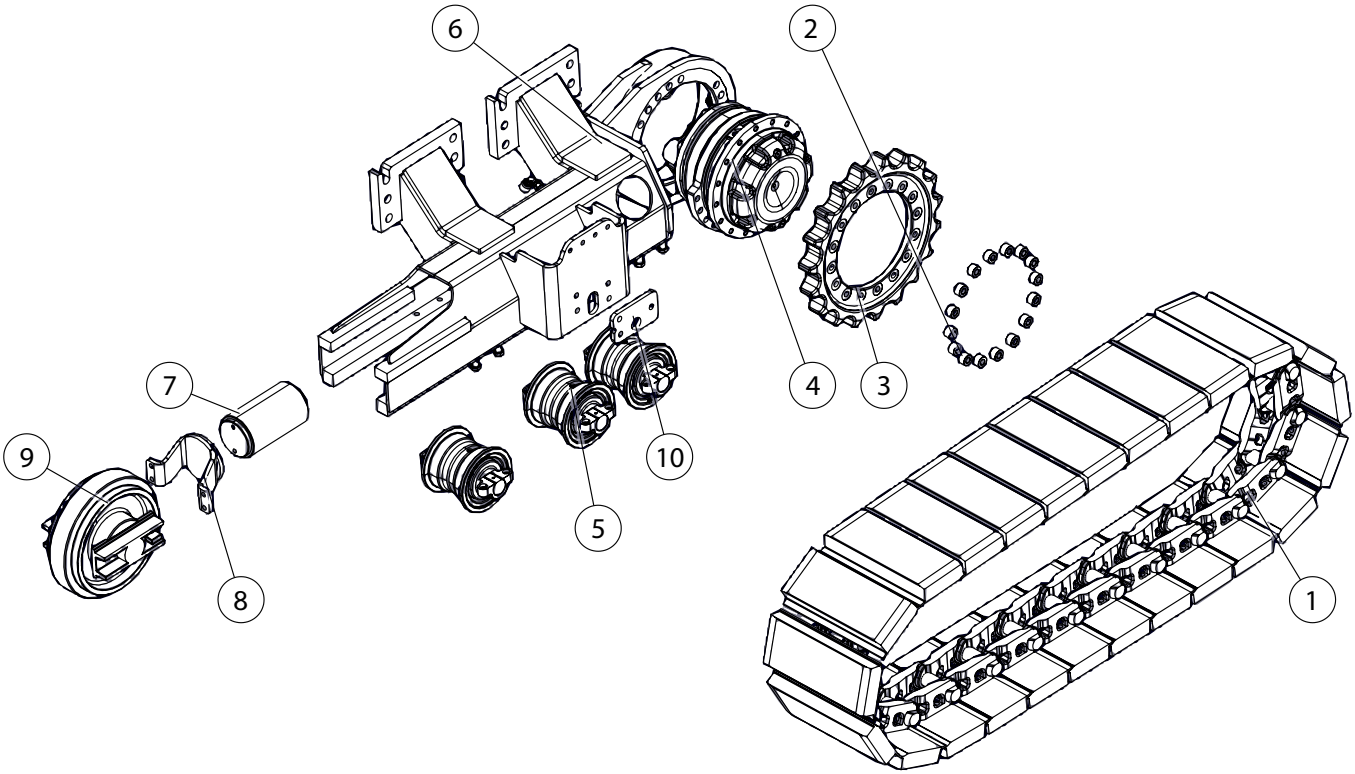

Left Hand Track Drive

BOM ID	PART NUMBER	DESCRIPTION	Qty
1	050-0439	COMPLETE TRACK ASSEMBLY	1
2	093-760514	1/2” BOLT SPACER	16
3	015-0356	760 TRACK DRIVE SPROCKET	1
4	013-0112	DRIVE MOTOR PLANTARY COMBINATION UNIT	1
5	050-0257	UNDERCARRIAGE TRACK ROLLER, SMALL	3
6	092-760501	UNDERCARRIAGE WELDEMENT, LEFT	1
7	012-0060	CYLINDER TRACK TENSION	1
8	092-204524	TRACK TENSION CYLINDER PRESSURE PLATE	1
9	050-0624	TRACK IDLER WHEEL ASSEMBLY	1
10	093-204550	TOW POINT MOUNTING PLATE	1

12.0 Schematics

12.1 Electrical

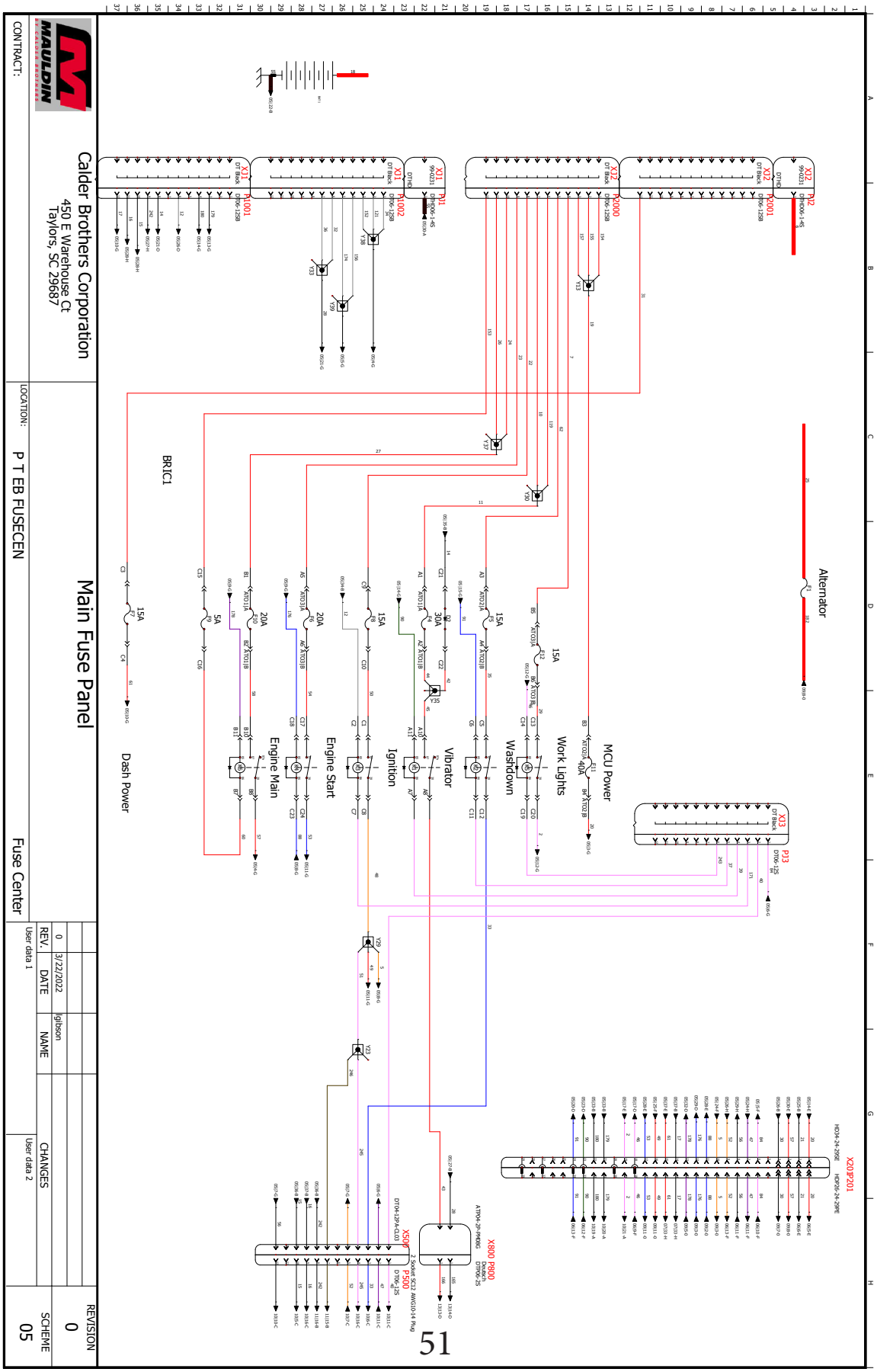

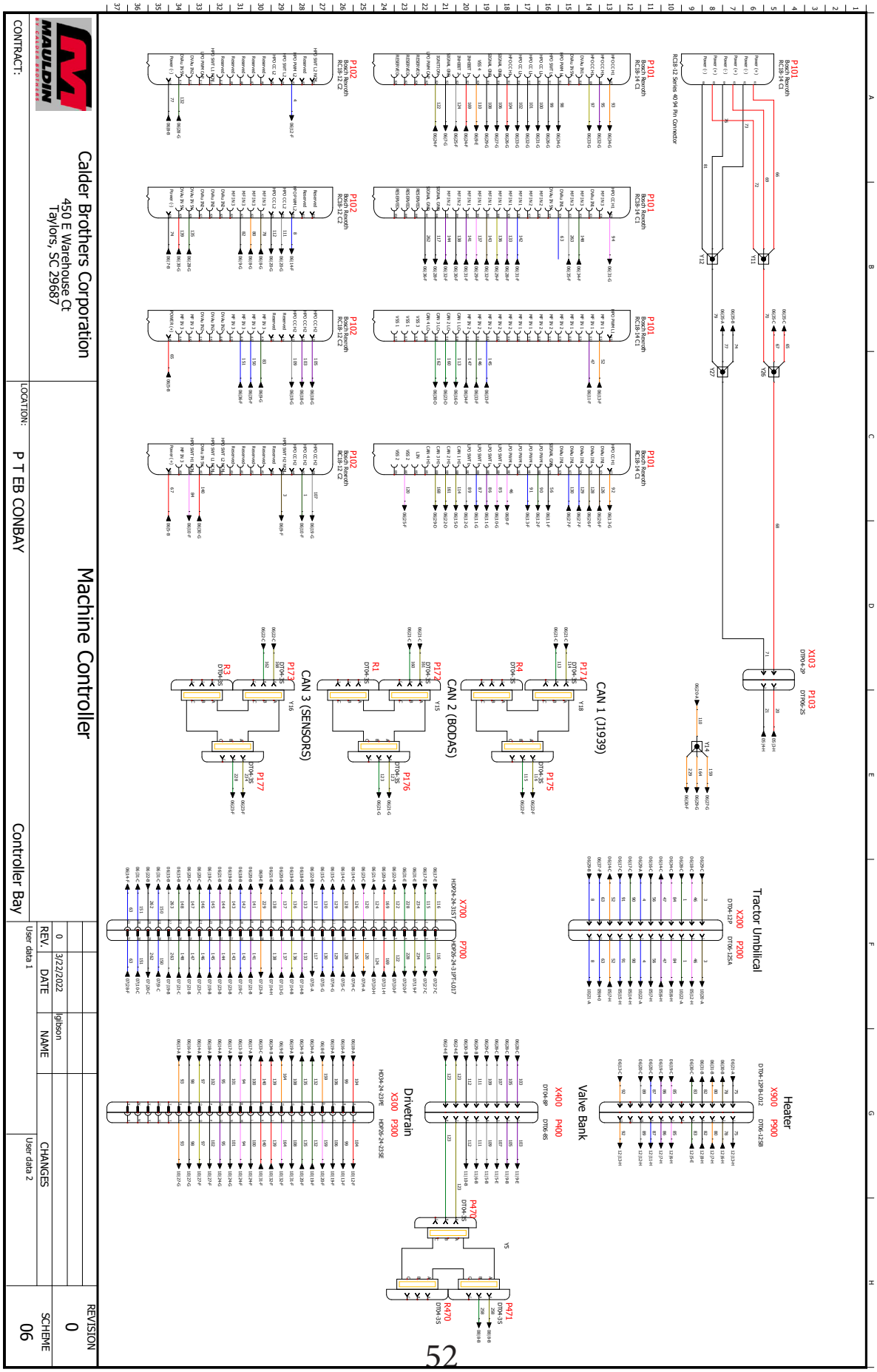
Machine Controller
Calder Brothers Corporation
450 E Warehouse Ct
Taylors, SC 29687
MAULDIN
CONTRACT:
LOCATION: P T EB CONBAY
Controller Bay
REV. 0
DATE 3/22/2022
NAME Iglbson
CHANGES
User data 1
User data 2
REVISION 0
SCHEME 06
P101 Bosch Rexroth RC18-14 CI
RC18-12 Series 40 94 Pin Connector
P102 Bosch Rexroth RC18-12 CI
X103 DT04-2P
P103 DT06-2S
Tractor Umbilical
X200 P200
DT04-12P DT06-12SA
CAN 1 (J1939)
CAN 2 (BODAS)
CAN 3 (SENSORS)
Heater
X900 P900
DT04-12P9-L012 DT06-12S9
Valve Bank
X400 P400
DT04-8P DT06-8S
Drivetrain
X300 P300
HDP24-24-23J5E HDP06-24-23J5E
X700 P700
HDP24-24-31S71 HDP06-24-31PT-L017

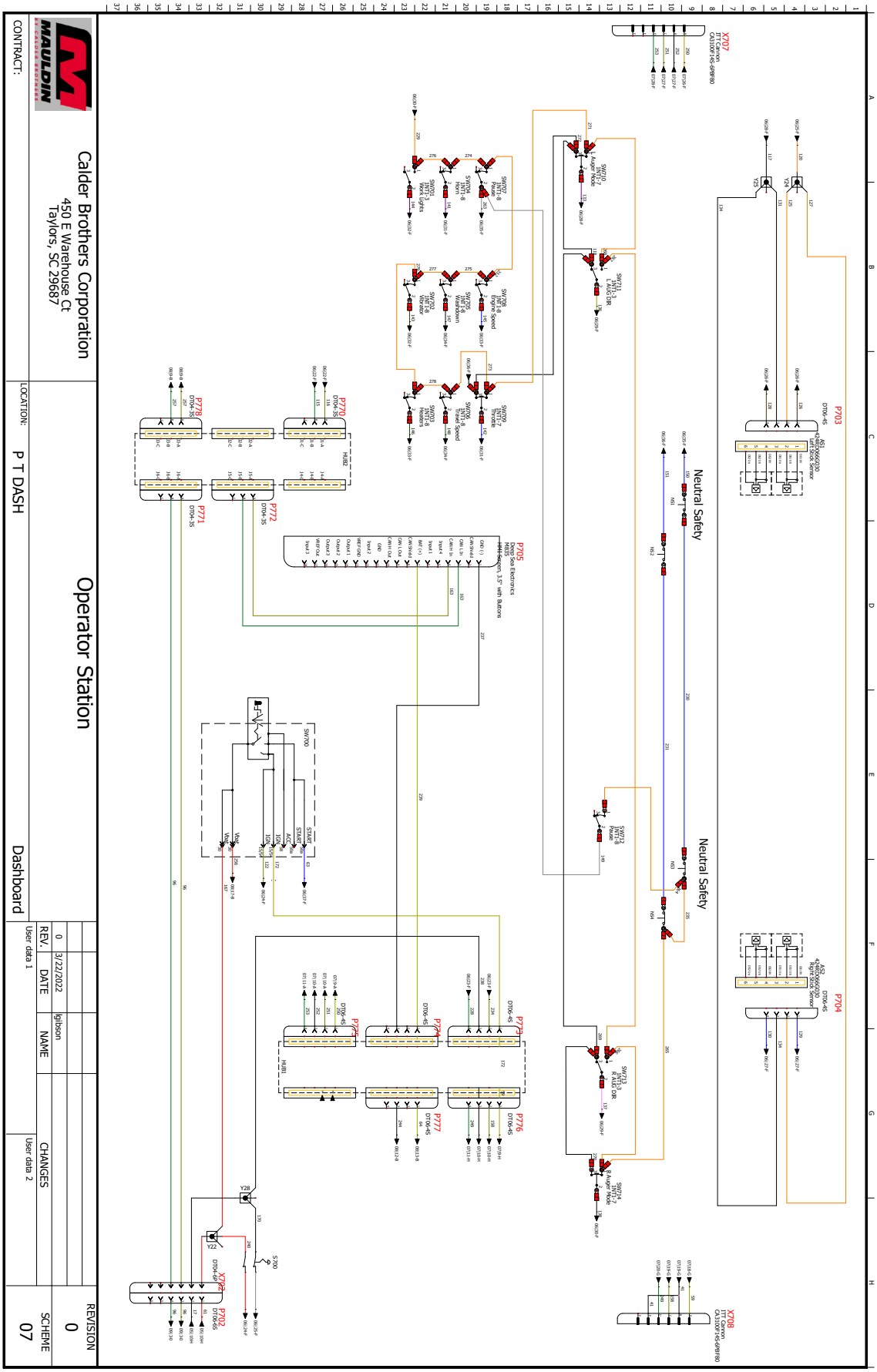
Calder Brothers Corporation
450 E Warehouse Ct
Taylors, SC 29687
Operator Station
Dashboard
P T DASH
CONTRACT:
LOCATION:
REVISION 0
SCHEME 07
REV. 0
DATE 3/22/2022
NAME lgibson
CHANGES
User data 1
User data 2
Neutral Safety
Neutral Safety
P703
P704
P705
P770
P771
P772
P773
P774
P775
P776
P777
P778
X707
X708
X702
SW700
Y22
Y28
S700

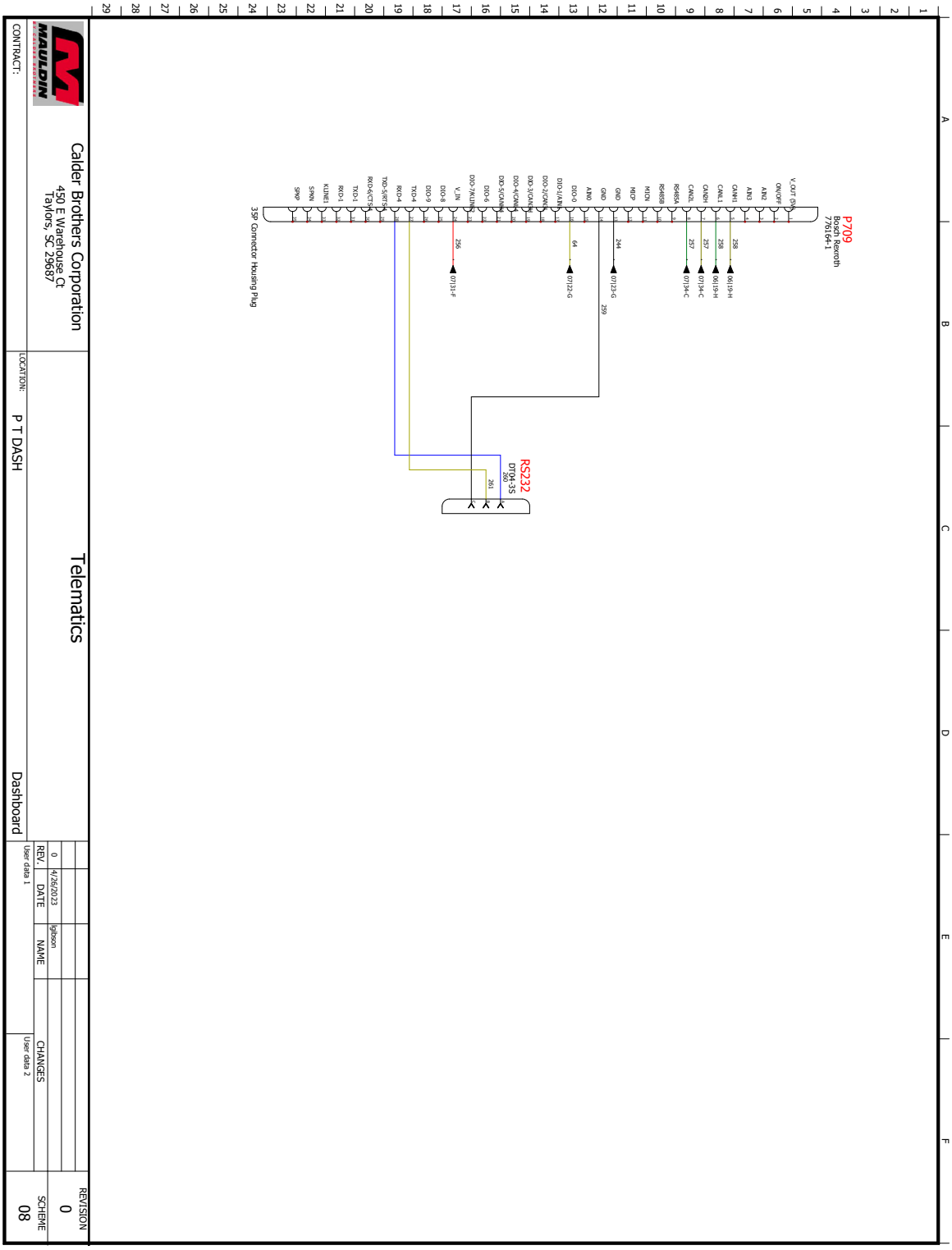

Calder Brothers Corporation
450 E Warehouse Ct
Taylors, SC 29687

MAULDIN

Telematics

CONTRACT:

LOCATION: P T DASH

Dashboard

REV.	DATE	NAME	CHANGES
0	4/26/2023	tgibson	

User data 1

User data 2

REVISION 0

SCHEME 08

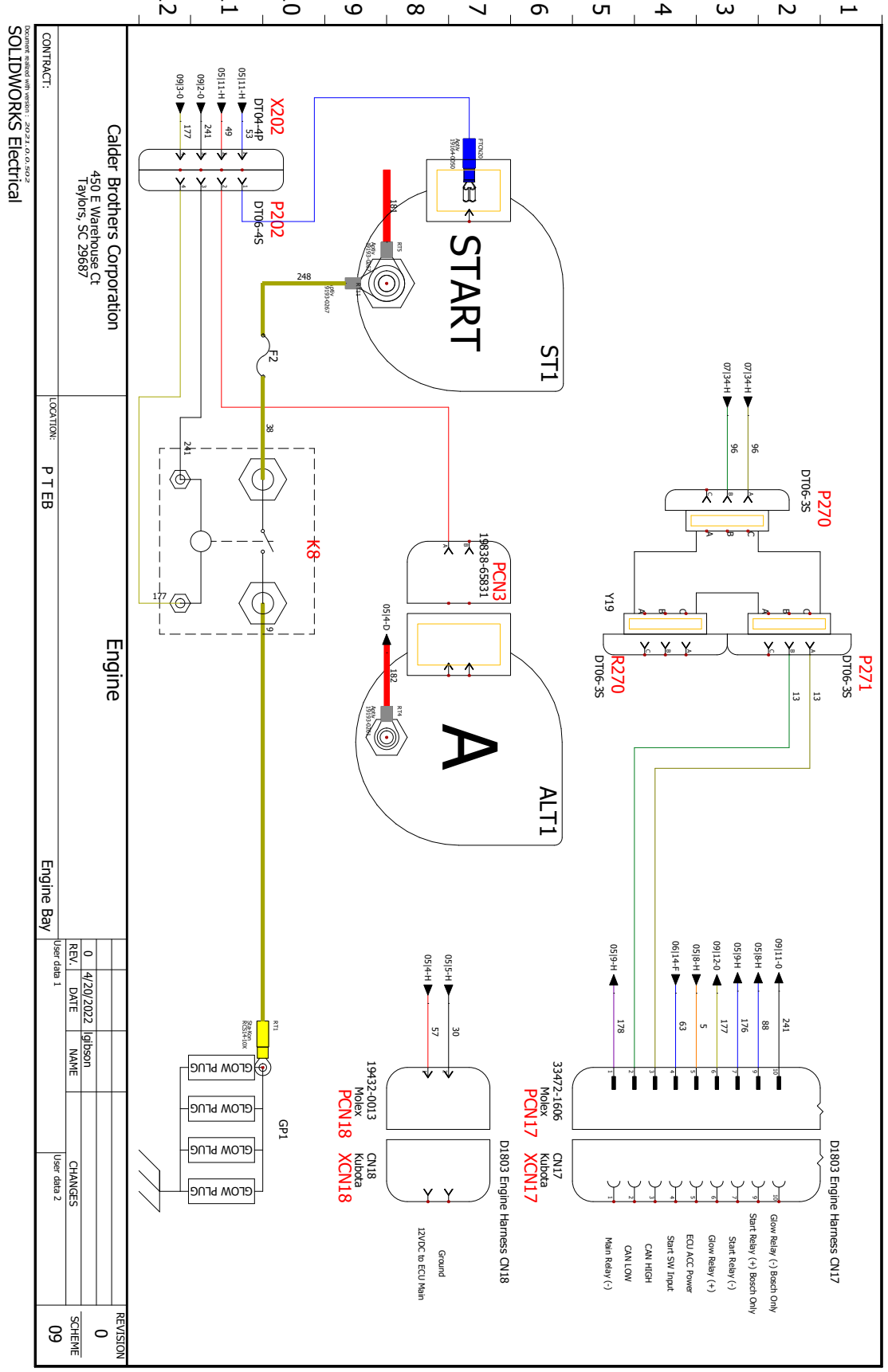
P270
DT06-3S
P271
DT06-3S
R270
DT06-3S
Y19
D1803 Engine Harness CN17
Glow Relay (-) Bosch Only
Start Relay (+) Bosch Only
Start Relay (-)
Glow Relay (+)
ECU ACC Power
Start SW Input
CAN HIGH
CAN LOW
Main Relay (-)
CN17
Kubota
XCN17
33472-1606
Molex
PCN17
D1803 Engine Harness CN18
Ground
12VDC to ECU Main
CN18
Kubota
XCN18
19432-0013
Molex
PCN18
GP1
GLOW PLUG
GLOW PLUG
GLOW PLUG
GLOW PLUG
ALT1
A
PCN3
19038-6531
ST1
START
X202
DT04-4P
P202
DT06-4S
K8
F2
Calder Brothers Corporation
450 E Warehouse Ct
Taylors, SC 29687
Engine
Engine Bay
P T EB
LOCATION:
CONTRACT:
SOLIDWORKS Electrical
REVISION
0
SCHEME
09
CHANGES
NAME
DATE
REV.
0
4/20/2022
Iglbson

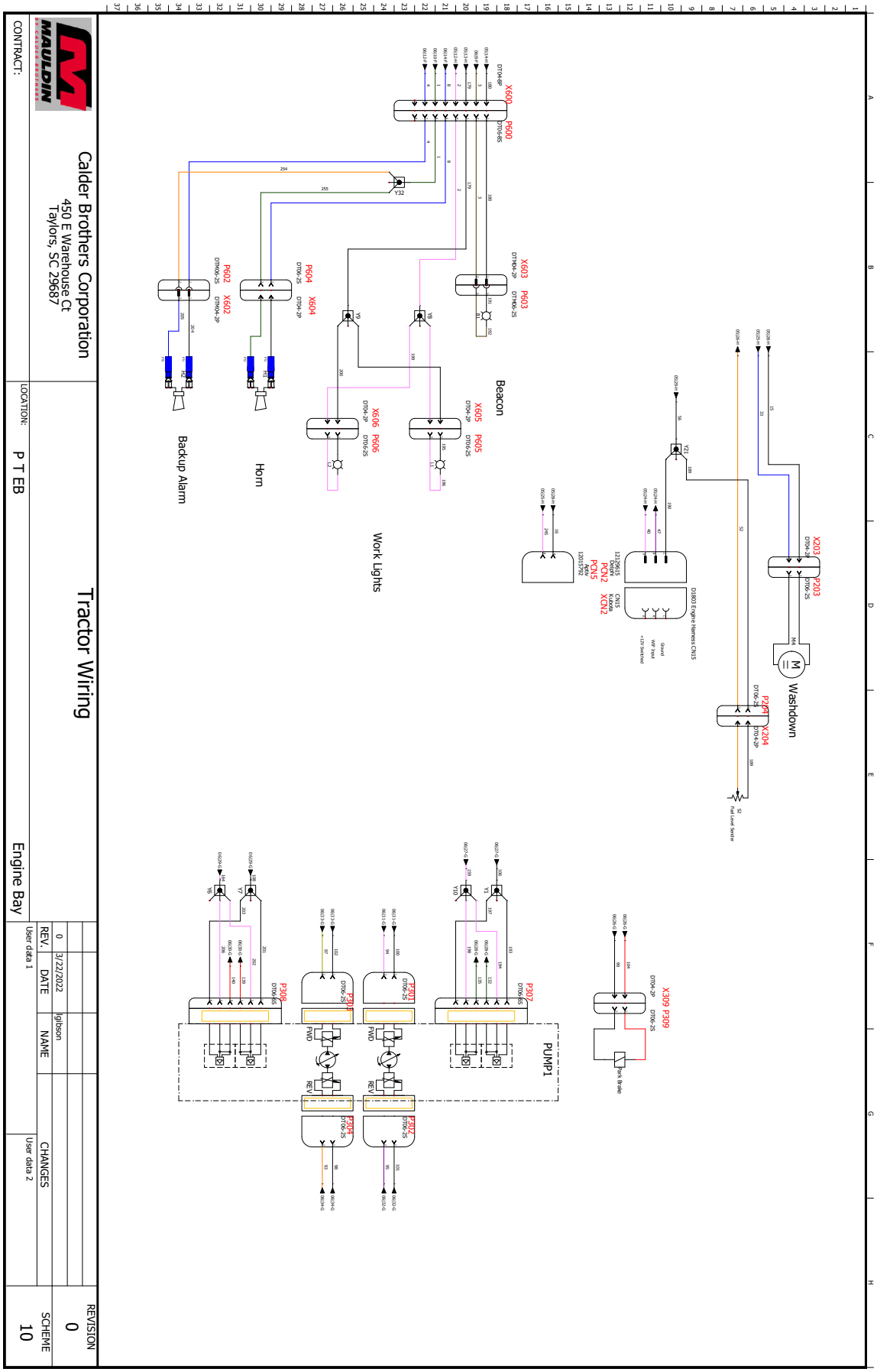
Calder Brothers Corporation
450 E Warehouse Ct
Taylors, SC 29687
Tractor Wiring
CONTRACT:
LOCATION:
P T EB
Engine Bay
REV.
0
DATE
3/22/2022
NAME
Igibson
CHANGES
User data 1
User data 2
REVISION
0
SCHEME
10
Beacon
Horn
Backup Alarm
Work Lights
Washdown
PUMP1
FWD
REV
Fuel Level Sensor
Jack Brake
D1803 Engine Harness CN15

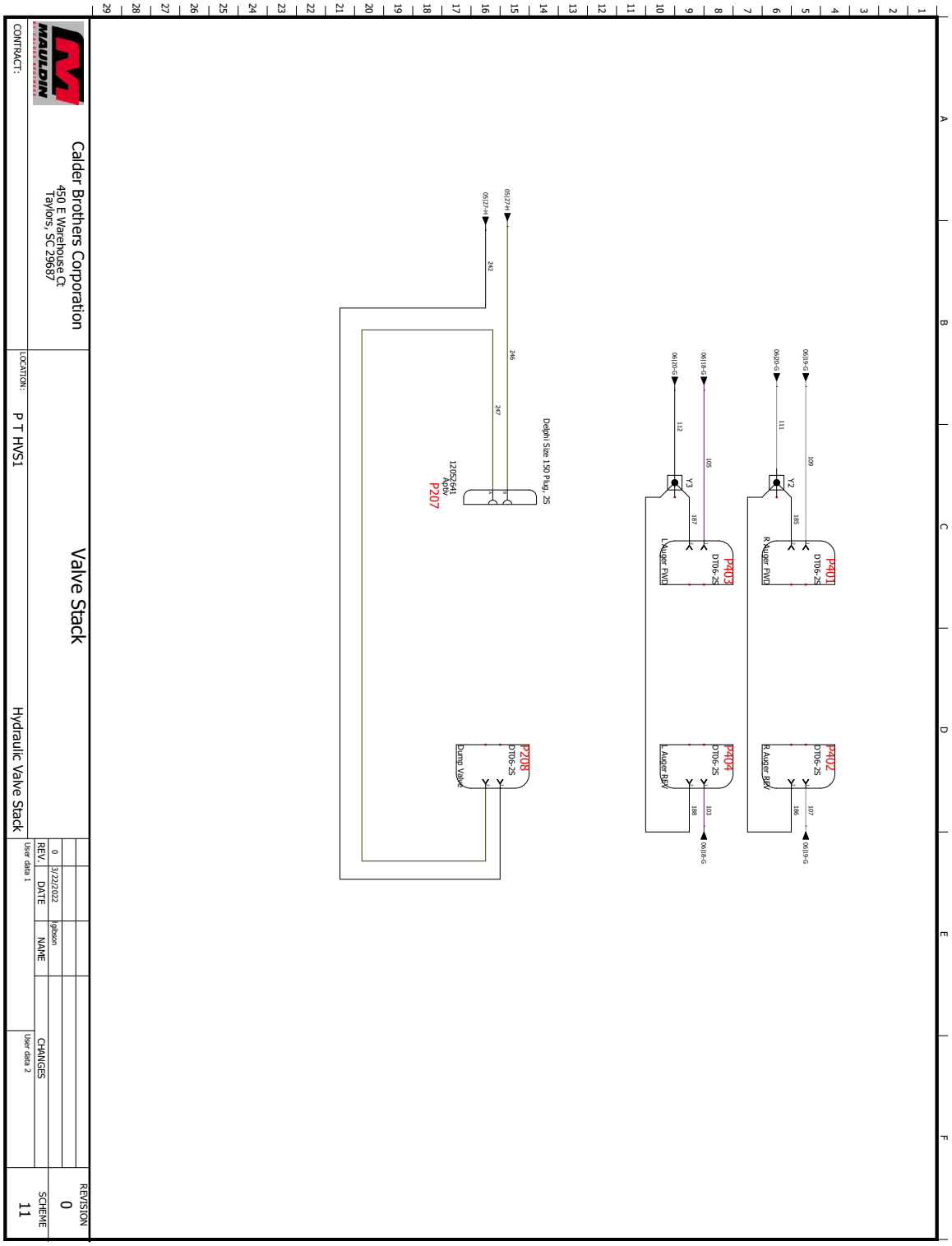
P401
DT06-2S
R Auger FWD
P402
DT06-2S
R Auger REV
P403
DT06-2S
L Auger FWD
P404
DT06-2S
L Auger REV
Y2
Y3
Delphi Size 150 Plug, 2S
12052641
Auto
P207
P208
DT06-2S
Dump Valve
Calder Brothers Corporation
450 E Warehouse Ct
Taylors, SC 29687
Valve Stack
LOCATION: P T HVS1
Hydraulic Valve Stack
CONTRACT:
REV. 0
DATE 3/22/022
NAME rgilson
CHANGES
User data 1
User data 2
REVISION 0
SCHEME 11

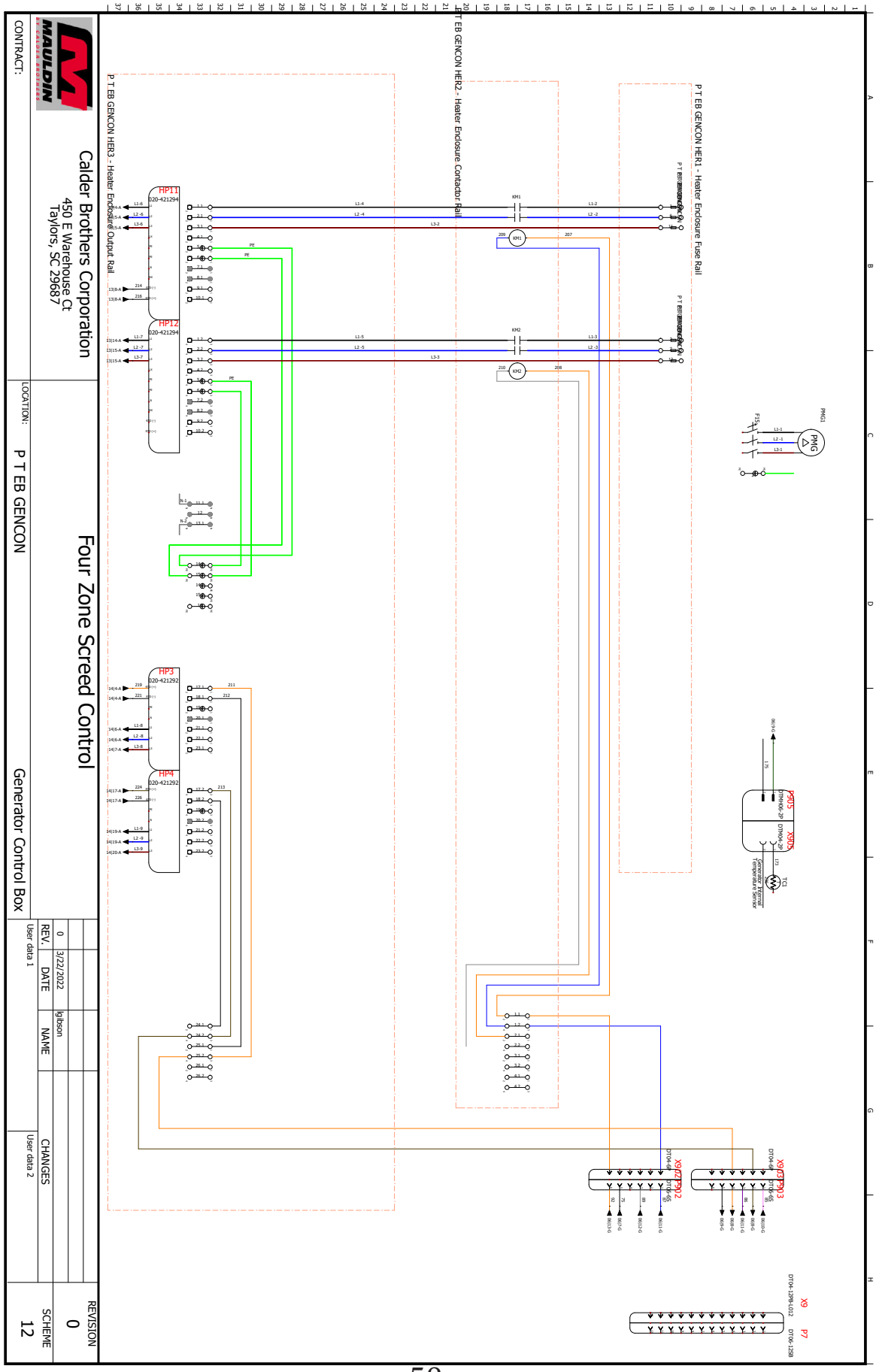
P T EB GENCON HER1 - Heater Enclosure Fuse Rail
P T EB GENCON HER2 - Heater Enclosure Contactor Rail
P T EB GENCON HER3 - Heater Enclosure Output Rail
HP11
020-421294
HP12
020-421294
HP3
020-421292
HP4
020-421292
KM1
KM2
PMG1
PMG
X9
P7
DT04-12PB-L012
DT06-12SB
X9P5
X9P3
X9P2
X9P1
DT04-4P
DT06-4S
DT04-2P
DT06-2S
DT04-6P
DT06-6S
DT04-8P
DT06-8S
TC1
Temperature Sensor
Temperature Sensor
Calder Brothers Corporation
450 E Warehouse Ct
Taylors, SC 29687
Four Zone Screed Control
P T EB GENCON
Generator Control Box
CONTRACT:
LOCATION:
REVISION
0
SCHEME
12
REV
DATE
NAME
CHANGES
User data 1
User data 2
0
3/22/2022
lgibson

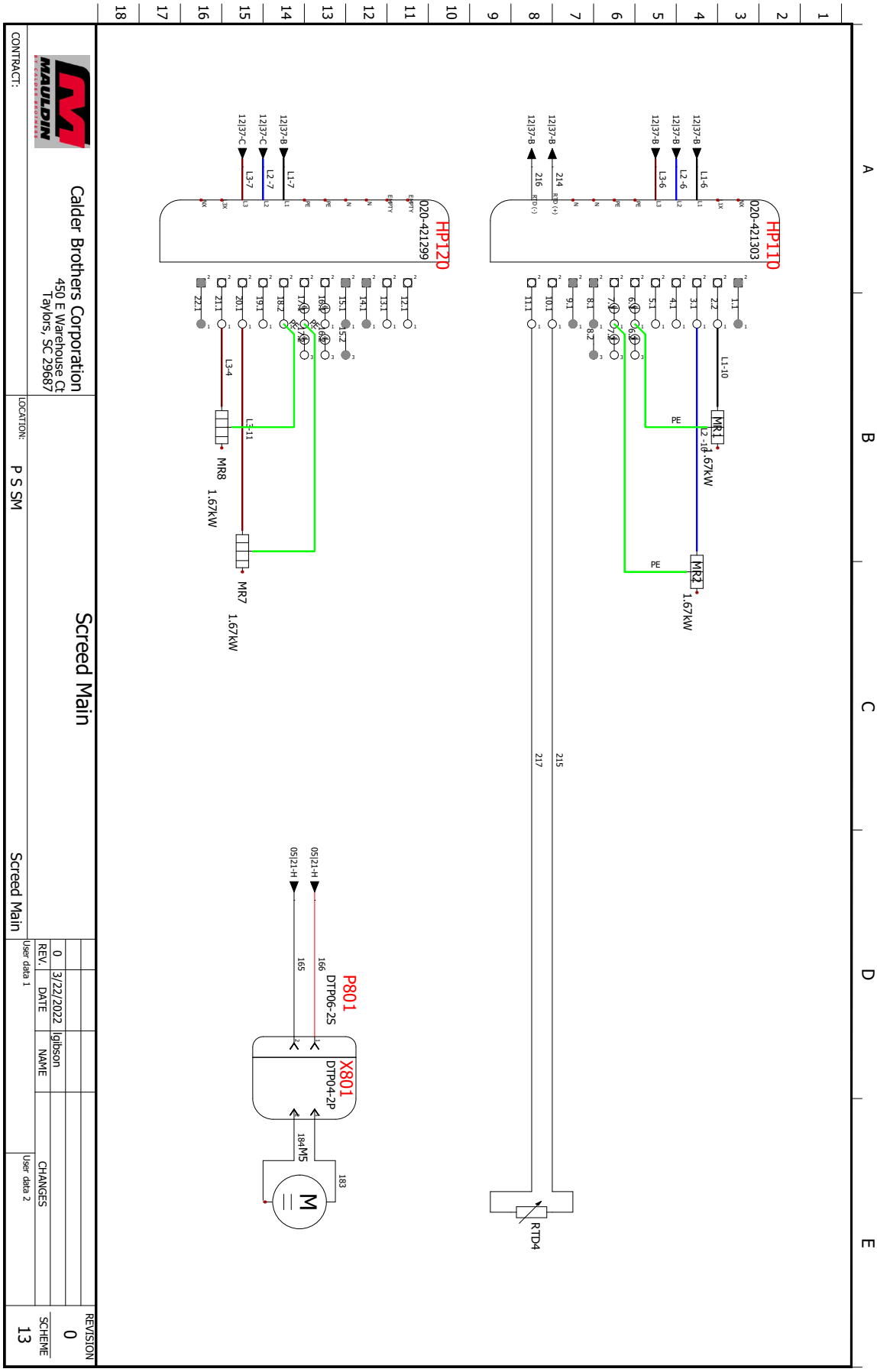
HP110
020-421303
HP120
020-421299
MR1
1.67KW
MR2
1.67KW
MR7
1.67KW
MR8
1.67KW
RTD4
P801
DTP06-2S
X801
DTP04-2P
M5
Calder Brothers Corporation
450 E Warehouse Ct
Taylors, SC 29687
Screed Main
CONTRACT:
LOCATION:
P S SM
Screed Main
REV.
DATE
NAME
CHANGES
0
3/22/2022
lgibson
User data 1
User data 2
REVISION
0
SCHEME
13

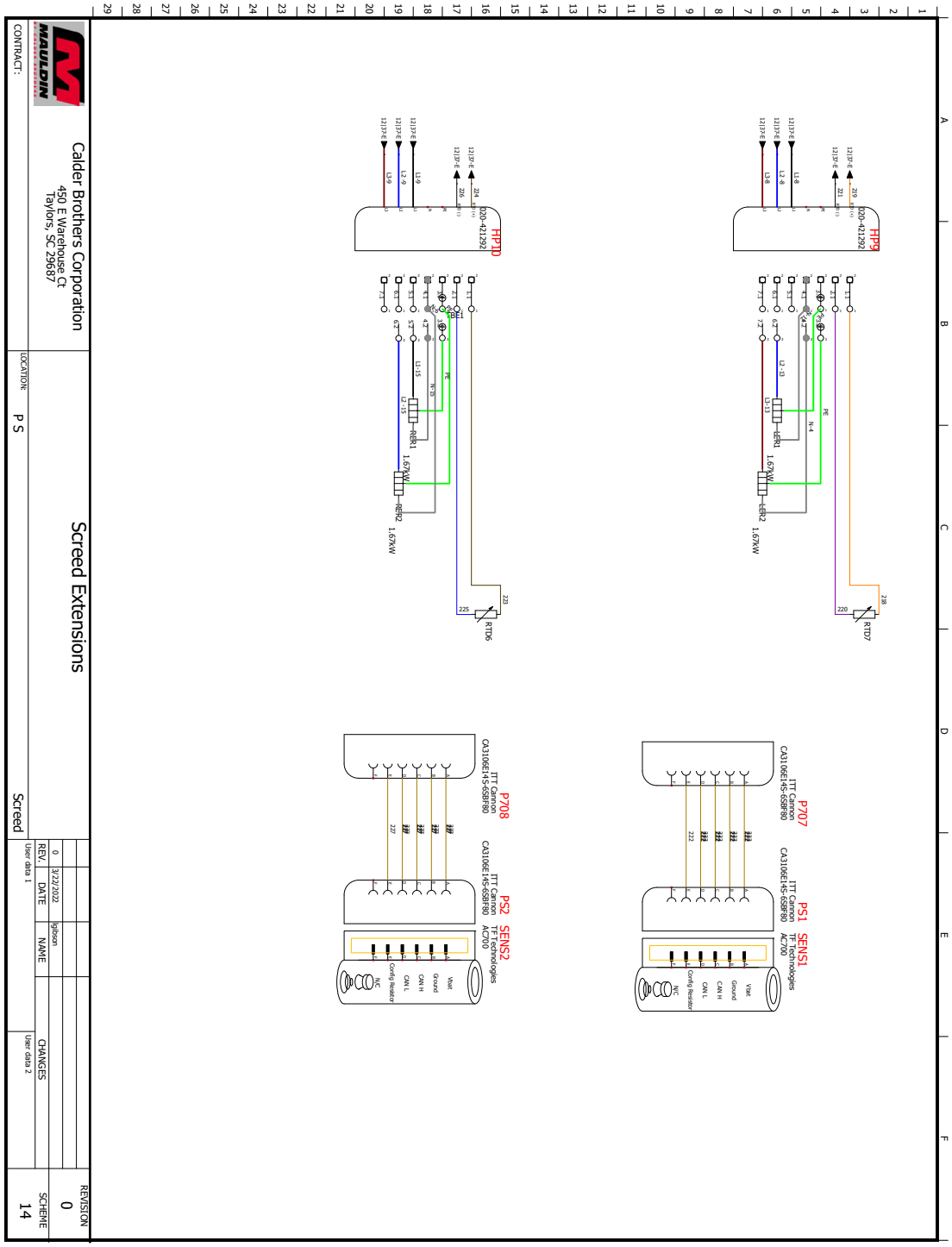
HP9
0200-421292
HP10
0200-421292
RTD7
RTD6
P707
ITT Cannon
CA3106E145-6S8F80
PS1
ITT Cannon
CA3106E145-6S8F80
SENS1
TF Technologies
AC700
P708
ITT Cannon
CA3106E145-6S8F80
PS2
ITT Cannon
CA3106E145-6S8F80
SENS2
TF Technologies
AC700
Vbat
Ground
CAN H
CAN L
Config Resistor
N/C
Calder Brothers Corporation
450 E Warehouse Ct
Taylors, SC 29687
Screed Extensions
LOCATION:
P S
Screed
CONTRACT:
REV.
DATE
NAME
CHANGES
User data 1
User data 2
0
3/22/2022
Ighlson
REVISION
0
SCHEME
14

Serial Number Range:
716-W-76TKP8Y2*04716 to _____

A B C D E

1 2 3 4 5 6 7 8 9 10 11 12 13 14 15 16 17 18

BRIC1

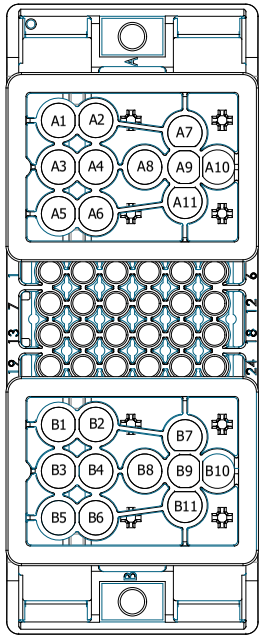

BRIC1
DC Fuse Block
Chief Enterprises
C1238

Pin	Signal	Dest.	Wire Info #	Color	AWG	Termination	Pin	Signal	Dest.	Wire Info #	Color	AWG	Termination	Pin	Signal	Dest.	Wire Info #	Color	AWG	Termination
A1	Vibrator Fuse +12V Splice 2x	Y30	11	RD	12	MCP 6.3/4.8K SCKT	C1	Ignition Relay Power Fuse	BRIC1:C10	50	RD	16	MP 280 SCKT	B1	ECM Main Fuse +12V x2	Y37	27	RD	12	MCP 6.3/4.8K SCKT
A2	Vibrator Fuse	Y35	44	RD	12	MCP 6.3/4.8K SCKT	C2	Ignition Relay Coil GND	P1001:6	12	GY	16	MP 280 SCKT	B2	Engine Main Relay Power Fuse	BRIC1:B10	58	RD	12	MCP 6.3/4.8K SCKT
A3	Washdown Fuse +12V	P2000:5	62	RD	12	MCP 6.3/4.8K SCKT	C3	Dash Fuse +12V	P2001:12	31	RD	12	MP 280 SCKT	B3	MCU Fuse +12V x3	Y13	19	RD	10	MCP 6.3/4.8K SCKT
A4	Washdown Fuse	BRIC1:C5	35	RD	12	MCP 6.3/4.8K SCKT	C4	Key Switch Fused +12V	X201:15	61	RD	16	MP 280 SCKT	B4	MCU Fused +12V Bus	X201:1	20	RD	12	MCP 6.3/4.8K SCKT
A5	Starter Bendix Fuse +12V	P2000:9	23	RD	12	MCP 6.3/4.8K SCKT	C5	Washdown Fuse	BRIC1:A4	35	RD	12	MP 280 SCKT	B5	Work Lights Fuse +12V	P2000:4	7	RD	12	MCP 6.3/4.8K SCKT
A6	Engine Start Relay Power Fuse	BRIC1:C11	54	RD	16	MCP 6.3/4.8K SCKT	C6	Washdown Coil LS	X201:24	91	BUPK	18	MP 280 SCKT	B6	Work Lights Fuse	BRIC1:C13	29	RD	12	MCP 6.3/4.8K SCKT
A7	Vibrator Coil HS	P13:4	39	PK	16	MCP 6.3/4.8K SCKT	C7	Ignition Coil HS	P13:3	171	PK	16	MP 280 SCKT	B7	ECM Main Relay Coil Fuse	BRIC1:C16	60	RD	16	MCP 6.3/4.8K SCKT
A8	Vibrator Power	X800:2	43	RD	12	MCP 6.3/4.8K SCKT	C8	Accessory Power Bus	Y29	48	OG	18	MP 280 SCKT	B8	Fused ECM Battery (+)	X201:3	57	RD	12	MCP 6.3/4.8K SCKT
A9						MCP 6.3/4.8K SCKT	C9	Ignition Fuse +12V	P2000:8	22	RD	12	MP 280 SCKT	B9						MCP 6.3/4.8K SCKT
A10	Vibrator Relay Power Splice	Y35	45	RD	12	MCP 6.3/4.8K SCKT	C10	Ignition Relay Power Fuse	BRIC1:C1	50	RD	16	MP 280 SCKT	B10	Engine Main Relay Power Fuse	BRIC1:B2	58	RD	12	MCP 6.3/4.8K SCKT
A11	Vibrator Coil LS	X201:23	90	GNPK	18	MCP 6.3/4.8K SCKT	C11	Washdown Coil HS	P13:5	37	PK	16	MP 280 SCKT	B11	Engine Main Relay Coil LS	X201:13	138	VTWH	18	MCP 6.3/4.8K SCKT
							C12	Fused/Relayed Washdown HS	X500:3	33	BUWH	16	MP 280 SCKT							
							C13	Work Lights Fuse	BRIC1:B6	29	RD	12	MP 280 SCKT							
							C14	Work Lights Coil LS	X201:18	46	PKYE	18	MP 280 SCKT							
							C15	ECM Main Coil HS Fuse +12V	P2000:12	153	RD	12	MP 280 SCKT							
							C16	ECM Main Relay Coil Fuse	BRIC1:B7	60	RD	16	MP 280 SCKT							
							C17	Engine Start Relay Power Fuse	BRIC1:A6	54	RD	16	MP 280 SCKT							
							C18	Start Relay Coil LS	X201:12	176	BUYE	18	MP 280 SCKT							
							C19	Worklight Coil HS	P13:6	263	PK	16	MP 280 SCKT							
							C20	Work Lights HS SWT	X201:19	2	PK	16	MP 280 SCKT							
							C21	Suppressor Anode	P1001:8	14	BK	16	MP 280 SCKT							
							C22	Vibrator Suppressor Cathode	Y35	42	RD	12	MP 280 SCKT							
							C23	Stat Relay Coil (+)	X201:11	88	BUWH	18	MP 280 SCKT							
							C24	Starter Bendix HS	X201:17	53	BUWH	16	MP 280 SCKT							

Calder Brothers Corporation
450 E Warehouse Ct
Taylors, SC 29687

Fuse Center

REV.	DATE	NAME	CHANGES
0	11/1/2022	lgibson	

REVISION 0
SCHEME 43

CONTRACT:
LOCATION: P T EB FUSECEN
Fuse Center
User data 1
User data 2

12.2 Hydraulic Schematic

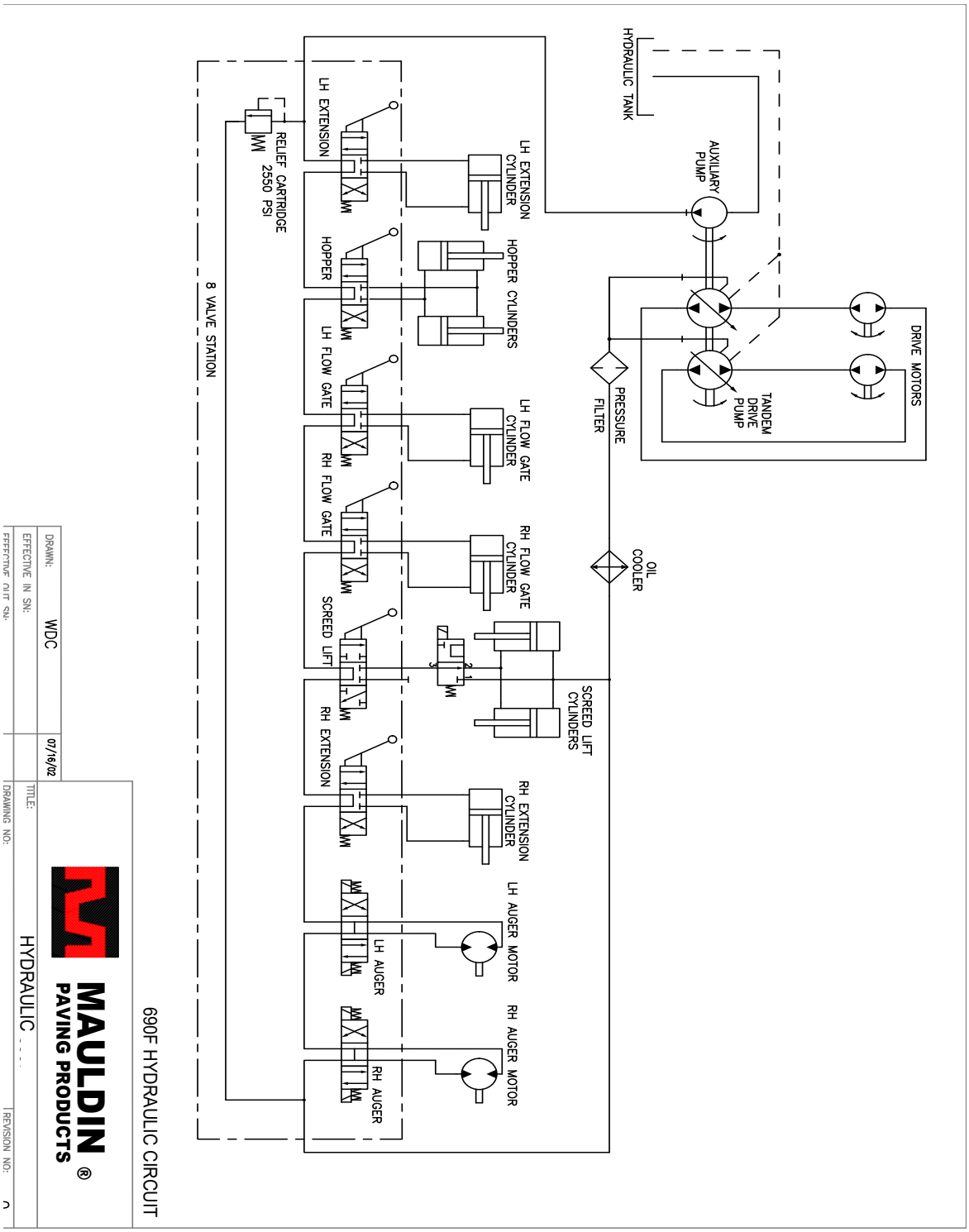

13.0 Warranty

MAULDIN
PAVING PRODUCTS

CALDER BROTHERS CORPORATION

(LIMITED) PRODUCT WARRANTY

Calder Brothers Corporation warrants that the Paver, Roller, Tank or Grader under this program will be free from defects in material and workmanship for a period of(12) twelve months from the date of installation. Written notice of any claimed defect must be given to Calder Brothers Corporation within the warranty period and within (30) thirty days after such defect is discovered. Liability under this warranty is limited to replacing or repairing at Calder Brothers Corporation election, any part or parts deemed defective after examination by Calder Brothers Corporation or an Authorized Service Representative via prepaid transportation for which is found to be defective, will be repaired or replaced and returned to the customer via prepaid surface transportation within the United States. Should any part be found not defective, inspection and handling may be charged to the customer by Mauldin or an Authorized Service Representative.

EXCLUSIONS:
This warranty does not apply to routine wearable parts of the Mauldin machine such as seals, points, plugs, hoses or similar items. This warranty does not extend to any machine or part replaced or repaired under this warranty. This warranty does not cover any repair or replacement labor or any part of parts found defective after examination by Mauldin or an Authorized Service Representative. This warranty does not apply to defects caused by casualty or unreasonable use, including faulty repairs by others and failure to provide reasonable and necessary maintenance.

THIS WARRANTY SET FORTH HEREIN IS IN LIEU OF AND EXCLUDES ANY AND ALL OTHER WARRANTIES, EXPRESSED OR IMPLIED, ARISING BY OPERATION OF LAW OR OTHERWISE, INCLUDING, BUT NOT LIMITED TO, ANY IMPLIED WARRANTY OF MERCHANTABILITY OR FITNESS FOR A PARTICULAR PURPOSE, AND CUSTOMER WAIVES ANY OBLIGATION OF LIABILTY OF MAULDIN ARISING IN TORT OR STRICT LIABILITY IN TORT, OR FOR LOSS OR USE, REVENUE OR PROFIT WITH RESPECT TO MAULDIN MACHINE AND/OR PARTS FOR ANY LIABILTY OF CUSTOMER TO ANY THIRD PARTY, OR FOR OTHER DIRECT, INCIDENTAL OR CONSEQUENTIAL DAMAGES.

I have read and fully understand the warranty policy above.

_____ _____
Customer Witness
CALDER BROTHERS CORPORATION